digital

DBII-A

Engineering Drawings

Digital Equipment Corporation

The material herein is for information purposes only and is subject to change without notice. Digital Equipment Corporation assumes no responsibility for any errors which may appear herein.

These drawings and specifications herein are the property of Digital Equipment Corporation and shall not be reproduced or copied or used in whole or in part as the basis for the manufacture or sale of items without written permission.
Copyright 1975, Digital Equipment Corporation

This drawing and specifications, herein, are the property of Digital Equipment Corporation and shall not be reproduced or copied or used in whole or in part as the basis for the manufacture or sale of items without written permission.

MASTER DRAWING LIST

DWG. NO.	REV. LET.	NO. OF SHEETS	TITLE
A-PL-DB11-A-Ø	D	1	DB11-A UA PL
D-AD-7009612-0-0	C	2	WIRED ASSY
A-WT-7009612-0	#	1	AWT REVISION STATUS
D-MU-DB11-A-Ø1	C	1	MODULE UTILIZATION
A PL-DB11-A-Ø1	C	1	MODULE UTILIZATION PL
D-BS-DB11-A-Ø2	A	1	BUS REPEATER DB11 UNIDIR LINES
D-BS-DB11-A-Ø3	A	1	BUS REPEATER DATA LINES
D-IC-DB11-A-Ø4	B	1	BUS AND POWER CONNECTIONS
D-BD-DB11-A-Ø5	C	1	DB11 INTER CONNECTION DIAGRAM
K-WL-DB11-A-Ø6	J	2	WIRE LIST (DB11-A) (COMPLETE)
A-SP-DB11-A-7	C	4	BUS REPEATER SPECIFICATION
A-AL-DB11-A-10		1	ACCESSORY LIST
E-IA-7009562-0-0	#	1	G772 SYS UNIT HARNESS
A-SP-DB11-A-8	REF	2	TEST PROCEDURE
A-SP-DB11-A-9	REF	2	IN HOUSE ACCEPTANCE TEST

REVISIONS			
REV.	DATE	CHG. NO.	APP'D.
A	5/71	DB11A-1	V.B.
B	6/71	DB11A-2	V. B.
C	9/71	DB11A-3	A.V.
D	1/72	DB11A-4	V. B.
E	6/72	DB11A-5	V.B.
F	7-73	DB11A-6	J.R.
H	10-73	DB11A-7	V. B.
J	10-73	DB11A-8	T. R.
K	12-73	DB11A-9	T.R.
L	1 -74	DB11A-10	V.B.
M	1 -74	DB11A-11	T.R.
N	10-74	DB11A-12	V.B.

DRN. BISSONNETTE	DATE 2/23/	digital EQUIPMENT CORPORATION MAYNARD, MASSACHUSETTS
CHK'D. MACKENZIE	DATE 3/3/71	
ENG.	DATE 3/16/71	TITLE DB11-A BUS REPEATER
PROJ. ENG.	DATE 3/1-/71	
PROD.	DATE 3/25/71	
FIRST USED ON PDP 11		SIZE A · CODE ML · NUMBER DB11-A · S
SCALE 1-1		
SHEET 1 OF 2		DIST.

DEC FORM NO.16--1033
DRA 103

ADDITIONAL CUSTOMER PRINTS
DB11-A

Drawing Number	Rev Let	Title
D-CS-M7212-0-1	#	A LINE REPEATER
D-CS-M7213-0-1	#	MASTER REPEATER
B-CS-M783-0-1	#	UNIBUS DRIVERS
B-CS-M784-0-1	#	UNIBUS RECEIVERS
B-CS-M785-0-1	#	UNIBUS TRANCEIVERS
C-CS-M930-0-1	#	BUS TERMINATOR
D-CS-M7248-0-1	#	UNIBUS REPEATER CARD

Rev.	Date	Change Number
P	11-74	DB11A-00013
R	3-75	DB11A 00014
S	1-76	DB11A -00015

V. BISSONNETTE 2/23/71
Requested by Date

Authorized by Date 3/25/71

A-ML-DB11-A SHEET 2 OF 2 REV S

DIGITAL EQUIPMENT CORPORATION
MAYNARD, MASSACHUSETTS

PARTS LIST

MADE BY V. BISSONNETTE DATE 2/23/71	CHECKED M. MACKENZIE DATE 3/3/71	SECTION 1
ENG V Bertoni DATE 3/16/71	PROD A Hugh DATE 3-25-71	ISSUED SECT. 1

ITEM NO.	DWG NO./PART NO.	DESCRIPTION	QUANTITY/VARIATION
1	D-AD-7009612-0-0	WIRED ASSY	1
2	A-PL-DB11-A-Ø1	MODULE UTILIZATION	1
3	A-PL-M920-Ø-Ø	INTERNAL BUS CONNECTOR M920	1
4	E-IA-7009562-0-0	G772 OPTION HARNESS *	1
5	12-09856-01	MODULE HOLDER	1
6	12-09856-02	MODULE HOLDER	1

* NOTE: For 11/45-11/50 CPU's with serial no's less than 2000 use harness 7008855. For 11/35-11/40 CPU's with S/N less than 6000 or H960-D, E with S/N less than 7000 use harness 7008909.

TITLE	ASSY NO.	SIZE	CODE	NUMBER	REV.	ECO NO.
DB11-A BUS REPEATER	A-ML-DB11-A	A	PL	DB11-A-Ø	D	DB11A-00004
	SHEET 1 OF 1	DIST.				

DEC FORM NO.
DRA 110

This drawing and specifications herein are the property of Digital Equipment Corporation and shall not be reproduced or copied or used in whole or in part as the basis for the manufacture or sale of items without written permission.

NOTES:
1. ALL VERTICAL HAND WIRING TO RUN OUTSIDE OF CONNECTOR BLOCK

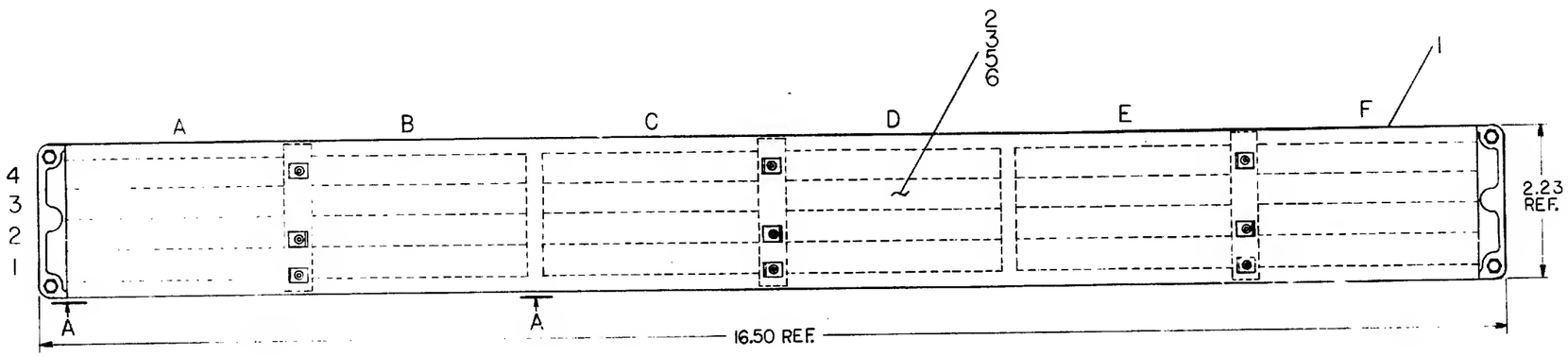

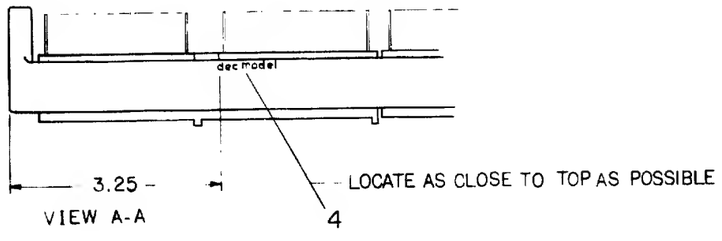

VIEW A-A

QTY.	DESCRIPTION	PART NO.	ITEM NO.
REF	AWT REVISION STATUS	A-WT-7009612-0	7
1	WIRE LIST	K-WL-DB11-A-06	REF
A/R	WIRE #30 AWG TWP BLK/WHT	9107720-09	6
A/R	WIRE 24 AWG SOLID KYNARINS BLK	9107688-00	5
A/R	LOGIC FRAME DECALS	A-DC-7406371-0-0	4
A/R	WIRE #24 AWG SOLID KYNARINS. RED	9107688-22	3
A/R	WIRE #30 AWG SOLID KYNARINS. YEL	9105740-44	2
1	BACK PLANE ASSY	7009152	1

PARTS LIST

FIRST USED ON OPTION/MODEL: DB11-A

UNLESS OTHERWISE SPECIFIED DIMENSION IN INCHES. TOLERANCES

DECIMALS	ANGLES
XXX = .005	±0° 30'
XX = .02	
X = .1	

REMOVE BURRS AND BREAK SHARP CORNERS SURFACE QUALITY ✓

MATERIAL

FINISH

DRN. [signature] DATE 8-3-73
CHK'D. [signature] DATE 10-30-73
ENG. [signature] DATE 10-30-73
SPEC. ENG. [signature] DATE 10-30-73
PROD. [signature] DATE [illegible]

NEXT HIGHER ASSY.

SCALE

SHEET 1 OF 2

EQUIPMENT CORPORATION
MAYNARD, MASSACHUSETTS

TITLE: WIRED ASS'Y (DB11-A)

SIZE D | CODE AD | NUMBER 7009612-0-0 | REV. C

CHK	REV.	CHANGE NO	REVISIONS
—	—	ORIGINATED	DB11A-00008
[illegible]	A	DB11A-00009	[illegible] 12-17-73
[illegible]	B	DB11A-0001	[illegible] 8-8-74
[illegible]	C	DB11A-00014	[illegible] 4-2-75
		V BASTIANI	[illegible]

BRUNING 40-107 15986
DEC FORM NO DRD 100-A

WIRE TABLE

ITEM NO.	SIGNAL NAME	FROM PIN	TO PIN	COLOR	REMARKS
3	+5V			RED	
		AØ3 A2	CØ1 A2		WIRES MUST PHYSICALLY RUN TO THE LEFT OF THE BLOCK AND PINS.
		AØ3 J2	EØ1 A2		
		AØ3 K2	BØ3 A2		
		AØ3 L2	DØ4 A2		WIRES MUST PHYSICALLY RUN TO THE RIGHT OF THE BLOCK AND PINS.
		AØ3 M2	FØ4 A2		
				RED	
5	GROUND	AØ3 D2	AØ3 E2	BLACK	
		AØ3 C2	AØ3 D2		
		AØ3 E2	AØ3 F2		
		AØ3 N1	AØ3 P1		
		AØ3 R1	AØ3 S1		
		AØ3 P1	AØ3 R1		
		AØ3 U1	AØ3 V1		
		AØ3 S1	AØ3 U1		
		AØ3 F2	AØ3 N1		
		AØ3 C2	FØ1 T1		
		AØ3 V1	CØ1 C2		
		AØ3 T1	EØ1 C2		
		FØ2 T1	CHASSIS	BLACK	
6	RIGHT BG4	BØ4 E2	DØ4 E2	WHT. } TWP	
	GROUND	BØ3 C2	DØ2 C2	BLK. }	
	RIGHT BG4	DØ4 E2	FØ2 F2	WHT. } TWP	
	GROUND	DØ2 C2	FØ2 C2	BLK. }	
6	RIGHT BG5	BØ4 B1	DØ4 B1	WHT. } TWP	
	GROUND	BØ3 C2	DØ1 C2	BLK. }	
	RIGHT BG5	DØ4 B1	FØ2 T2	WHT. } TWP	
	GROUND	DØ1 C2	FØ2 T1	BLK. }	
6	RIGHT BG6	BØ4 A1	DØ4 A1	WHT. } TWP	
	GROUND	BØ2 C2	CØ4 T1	BLK. }	
	RIGHT BG6	DØ4 A1	FØ2 N2	WHT. } TWP	
	GROUND	CØ4 T1	FØ2 T1	BLK. }	
6	RIGHT BG7	AØ4 V1	CØ4 V1	WHT. } TWP	
	GROUND	AØ4 T1	CØ2 T1	BLK. }	
	RIGHT BG7	CØ4 V1	FØ2 M1	WHT. } TWP	
	GROUND	CØ2 T1	FØ2 C2	BLK. }	

FIRST USED ON OPTION/MODEL: DBII-A	QTY.	DESCRIPTION: PARTS LIST	PART NO. / ITEM NO.
UNLESS OTHERWISE SPECIFIED DIMENSION IN INCHES TOLERANCES: DECIMALS XXX ± .005, XX ± .02, ^ ± 1; ANGLES ± 0° 30'; REMOVE BURRS AND BREAK SHARP CORNERS SURFACE QUALITY: ✓	DRN. R VOWLES	DATE 8-3-73	digital EQUIPMENT CORPORATION MAYNARD MASSACHUSETTS
	CHK'D.	DATE 10-30-73	
	ENG	DATE 10-31-73	
	MFG. ENG.	DATE 10-31-73	
	PROD.	DATE 10-31-73	
MATERIAL: —	NEXT HIGHER ASSY: —		TITLE: WIRED ASSY DBIIA
FINISH: —	SCALE: —	SIZE D / CODE AD	NUMBER 7009612-0-0 / REV C
	SHEET 2 OF 2	DIST.	

REVISIONS: REV | CHANGE NO | CHK

BRUNING 40-107 19868

DEC FORM NO DRD 100-A

This drawing and specifications, herein, are the property of Digital Equipment Corporation and shall not be reproduced or copied or used in whole or in part as the basis for the manufacture or sale of items without written permission.

DRAWING NUMBER	INIT REL	AUTOMATIC WIRE TESTER (AWT) REVISION STATUS																					REV. J
	T11	H	J																				
K-WL-DB11-A-06	H	H	J																				
D-AD-7009612-0-0	B	C	C																				
D-CS-5410094-0-1	E	E	E																				

SIZE A | CODE WT | NUMBER 7009612-0 | REV. J

REVISIONS			
CHK	CHANGE NO.		REV.
—	DB11A-00014	ORIGINATED	H
VB	DB1A-00015		J

DRN.	DATE 4-2-75	digital EQUIPMENT CORPORATION MAYNARD MASSACHUSETTS
CHK'D	DATE 4-2-75	
ENG.	DATE 4-7-75	TITLE DB11-A
PROJ ENG.	DATE 4-7-75	AWT REVISION STATUS
PROD.	DATE 4-7-75	SIZE A | CODE WT | NUMBER 7009612-0 | REV. J
FIRST USED ON		
SCALE		
SHEET 1 OF 1		DIST.

DRA 123

DEC 16-(325)-1097-N174

This drawing and specifications, herein, are the property of Digital Equipment Corporation and shall not be reproduced or copied or used in whole or in part as the basis for the manufacture or sale of items without written permission.

NOTE: WHEN INSTALLING A DB11-A IN A BA11-K 10 1/2" CHASSIS, THE AC LO AND DC LO WIRES MUST BE REMOVED FROM THE HARNESSES OF ALL OPTIONS AFTER THE DB11-A. THIS ONLY APPLIES TO OPTIONS MOUNTED IN THE SAME CHASSIS AS THE DB11-A.

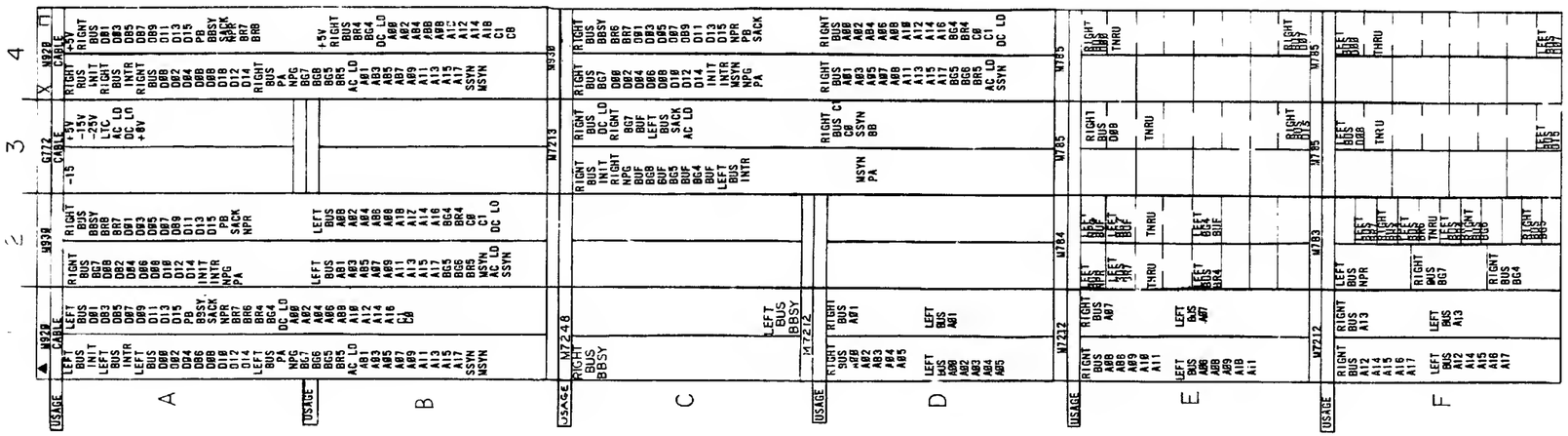

□ IF END OF BUS REPLACE M920 WITH M930

/ IF LAST UNIT IN BASIC BOX REPLACE M920 WITH BC11A CABLE END WHEN EXPANDING TO PHERIPERAL BOX.

▲ IF FIRST UNIT IN EXPANDER BOX REPLACE M920 WITH BC11A CABLE END

REVISIONS		
CHK	CHANGE NO	REV
	DB11A-00001	A
	BASTIANI	
	DB11A-00003	B
	BASTIANI	
	DB11A-00012	C
	BASTIANI	

QTY	DESCRIPTION	PART NO	ITEM NO
	PARTS LIST		

UNLESS OTHERWISE SPECIFIED
UNLESS OTHERWISE SPECIFIED DIMENSION IN INCHES
TOLERANCES
DECIMALS ± .005 FRACTIONS ± 1/64 ANGLES ± 0°30'
FINAL SURFACE QUALITY REMOVE BURRS AND BREAK SHARP CORNERS

MATERIAL

FINISH

DRN — DATE 2-22-71
CHK'D — DATE 3/8/71
ENG — DATE
PROJ ENG — DATE
PROD — DATE 3/25/71
EXT HIGHER ASSY A-ML-DB11-A-Ø
SCALE
SHEET 1 OF 1

digital EQUIPMENT CORPORATION
MAYNARD, MASSACHUSETTS

TITLE
MODULE UTILIZATION

SIZE D | CODE MU | NUMBER DB11-A-Ø1 | REV C
DIST

DIGITAL EQUIPMENT CORPORATION
MAYNARD, MASSACHUSETTS

PARTS LIST

MADE BY V. BISSONNETTE	CHECKED M. MACKENZIE	SECTION
DATE 2/4/71	DATE 3/3/71	1
ENG V Bissonnette	PROD A Hurwitch	ISSUED SECT.
DATE 3/10/71	DATE 3-25-71	1

ITEM NO.	DWG NO./PART NO.	DESCRIPTION	QUANTITY/VARIATION
	M783	UNIBUS TRANSMITTER MODULE	1
	M784	UNIBUS RECEIVER MODULE	1
	M785	UNIBUS TRANSCEIVER MODULE	4
	M7212	A LINE REPEATER	3
	M7213	MASTER REPEATER	1
	M930	PDP11 BUS TERMINATOR	2
	M7248	UNIBUS REPEATER CARD	1

TITLE	ASSY NO.	SIZE	CODE	NUMBER	REV.	ECO NO.
MODULE UTILIZATION (PL)	D-MU-DB11-A-Ø1	A	PL	DB11-A-Ø1	C	DB11A-00012
	SHEET 1 OF 1	DIST.				

DEC FORM NO.
DRA 110

This drawing and specifications, herein, are the property of Digital Equipment Corporation and shall not be reproduced or copied or used in whole or in part as the basis for the manufacture or sale of items without written permission.

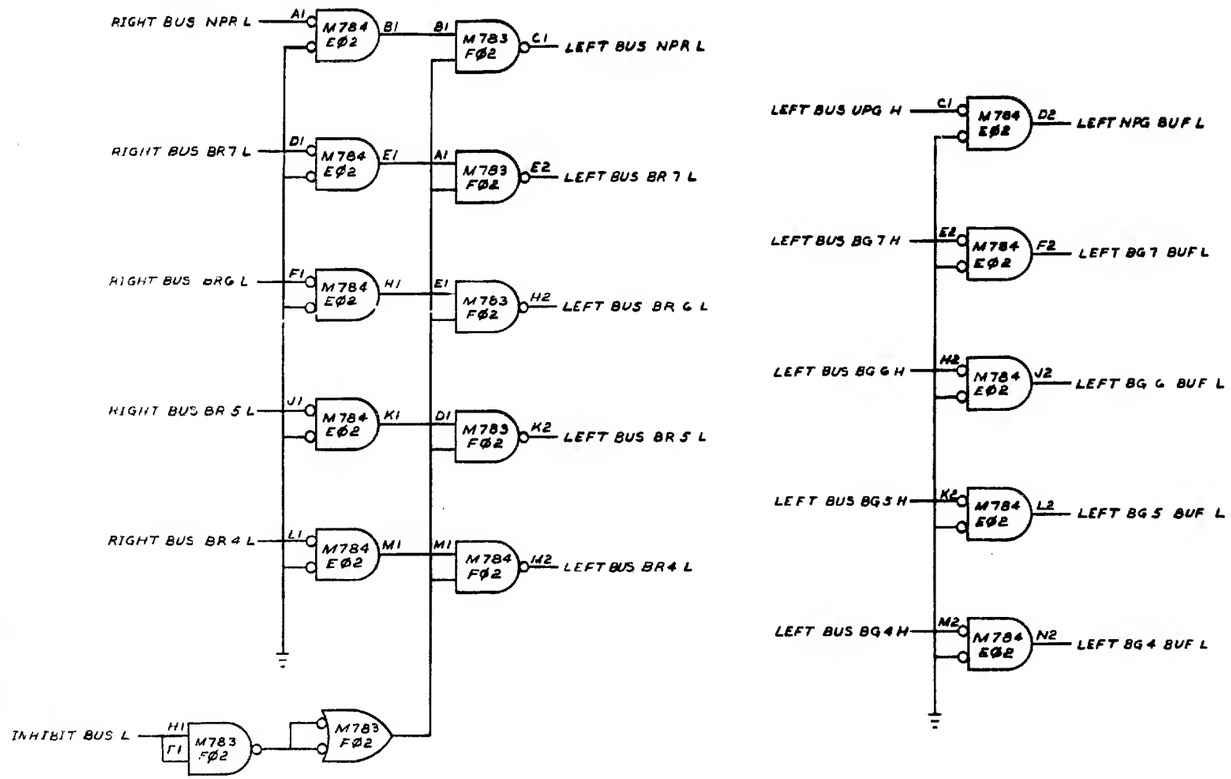

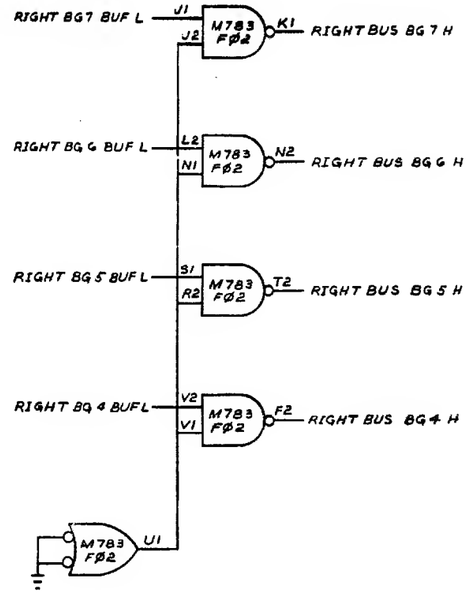

REVISIONS		
CHK	CHANGE NO	REV
	DB11A-00001	A

BASTIANI

FIRST USED ON UPTION/MODEL	QTY.	DESCRIPTION	PART NO.	ITEM NO.
PDP 11		PARTS LIST		

UNLESS OTHERWISE SPECIFIED
DIMENSION IN INCHES
TOLERANCES
DECIMALS ± .005 FRACTIONS ± 1/64 ANGLES ± 0°30'
FINAL SURFACE QUALITY
REMOVE BURRS AND BREAK SHARP CORNERS

MATERIAL —

FINISH —

DRN. V.BISSONNETTE	DATE 2-10-71	
CHK'D. [illegible]	DATE 3/4/71	
ENG. [illegible]	DATE 3/4/71	
PROJ. ENG. [illegible]	DATE 3/4/71	
PROD. [illegible]	DATE 3/5/71	

NEXT HIGHER ASSY
A-ML-DB11-A-Ø

SCALE —

SHEET 1 OF 1

digital EQUIPMENT CORPORATION MAYNARD MASSACHUSETTS

TITLE
BUS REPEATOR
DB 11
UNIDIR. LINES

SIZE	CODE	NUMBER	REV.
D	BS	DB11-A-Ø2	A

DIST.

FORM NO 10128

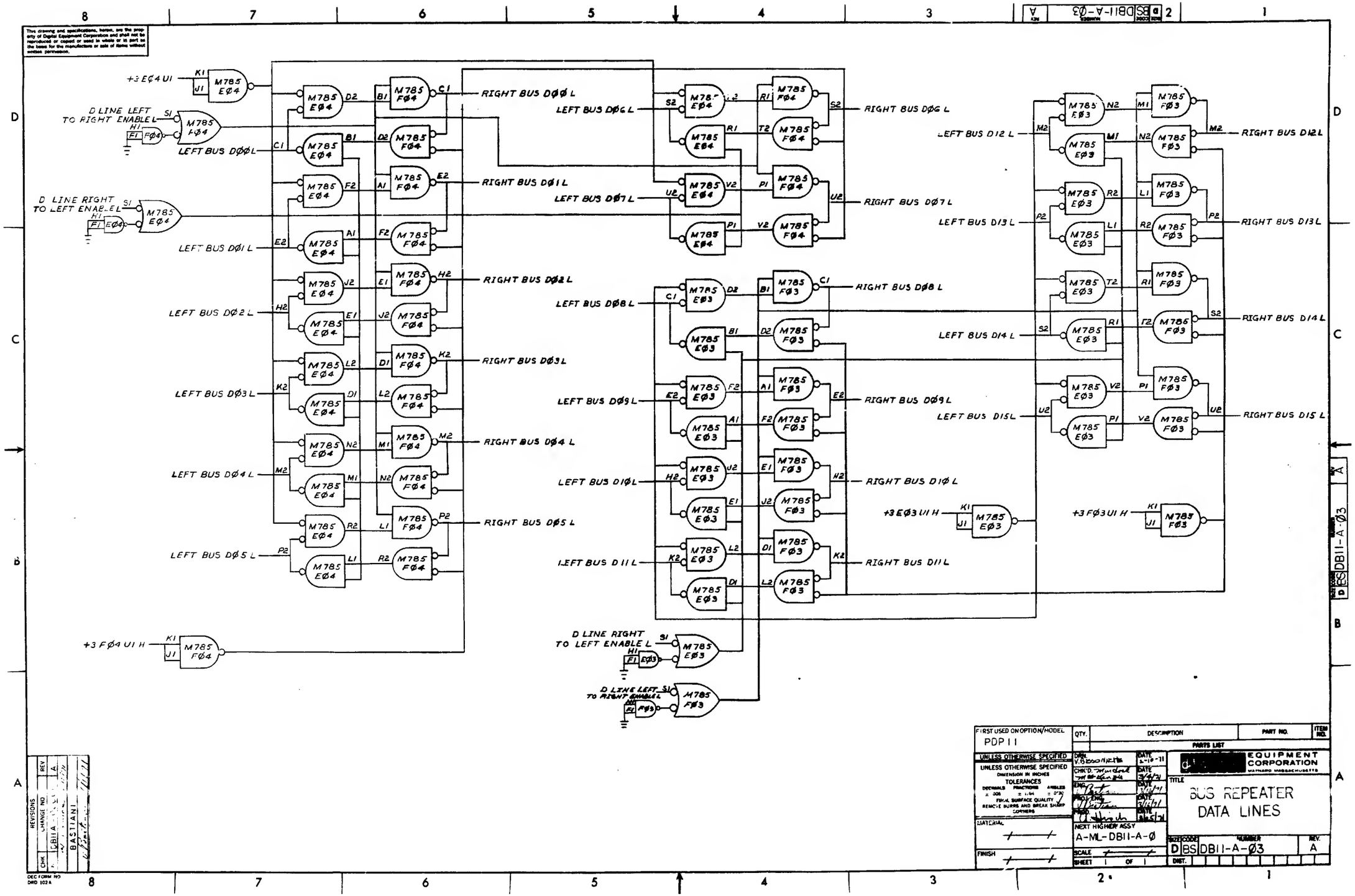

This drawing and specifications, herein, are the property of Digital Equipment Corporation and shall not be reproduced or copied or used in whole or in part as the basis for the manufacture or sale of items without written permission.

FIRST USED ON OPTION/MODEL	QTY.	DESCRIPTION	PART NO.	ITEM NO.
PDP 11		PARTS LIST		

UNLESS OTHERWISE SPECIFIED
UNLESS OTHERWISE SPECIFIED
DIMENSION IN INCHES
TOLERANCES
DECIMALS ± .005 FRACTIONS ± 1/64 ANGLES ± 0°30'
FINAL SURFACE QUALITY
REMOVE BURRS AND BREAK SHARP CORNERS

MATERIAL
FINISH

DRN. V. BESSONNETTE DATE 2-10-71
CHK'D. DATE 3/4/71
ENG. DATE 3/16/71
PROJ. ENG. DATE 3/16/71
PROD. DATE 3/25/71

NEXT HIGHER ASSY A-ML-DB11-A-Ø
SCALE
SHEET 1 OF 1

[redacted] EQUIPMENT CORPORATION
MAYNARD MASSACHUSETTS

TITLE
BUS REPEATER DATA LINES

SIZE D CODE BS NUMBER DB11-A-Ø3 REV. A
DIST.

REVISIONS
CHK | CHANGE NO | REV
DB11-A-Ø3 | A
BASTIANI

DEC FORM NO DRD 102A

This material and specifications, herein, are the property of Digital Equipment Corporation and shall not be reproduced or copied or used in whole or in part as the basis for the manufacture or sale of items without written permission.

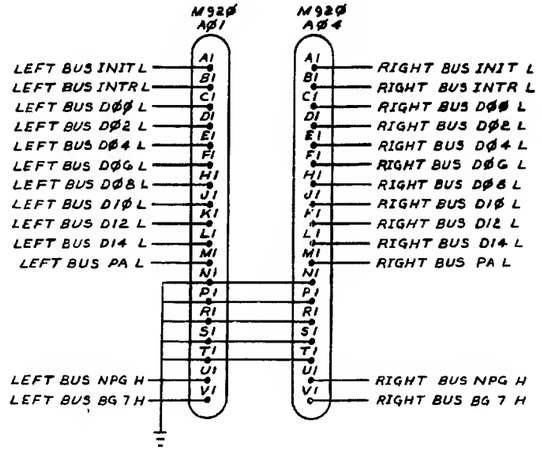

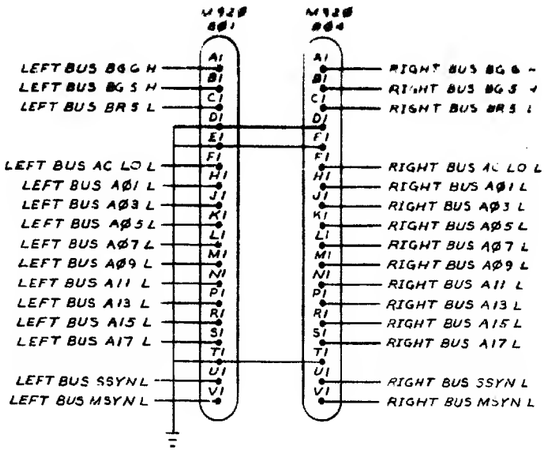

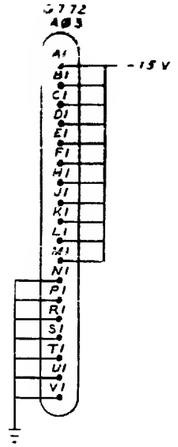

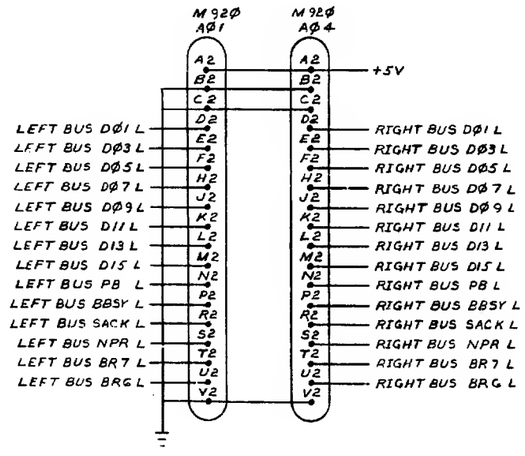

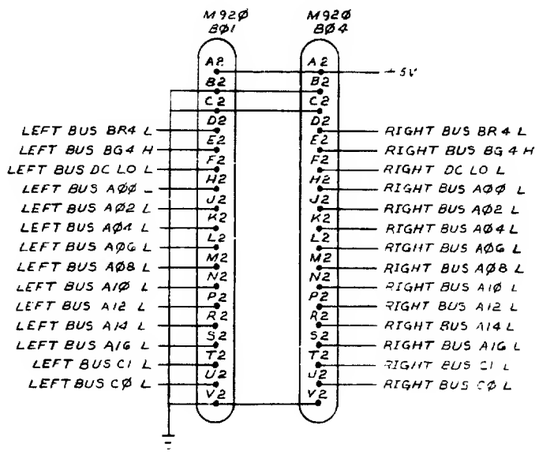

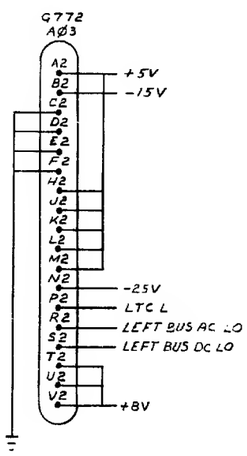

REVISIONS			
	CHK	CHANGE NO	REV
		DPLA-00001	A

BASTIANI 8/1/71

BASTIANI

DEC FORM NO DRD 102A

FIRST USED ON OPTION/MODEL	QTY.	DESCRIPTION	PART NO.	ITEM NO.
PDP11		PARTS LIST		

UNLESS OTHERWISE SPECIFIED

UNLESS OTHERWISE SPECIFIED
DIMENSION IN INCHES
TOLERANCES
DECIMALS ± .005 FRACTIONS ± 1/64 ANGLES ± 0°30'
FINAL SURFACE QUALITY 63 REMOVE BURRS AND BREAK SHARP CORNERS

MATERIAL

FINISH

	NAME	DATE
DRN.	V BISSONNETTE	2-12-71
CHK'D.		3/4/71
ENG.		3/4/71
PROJ. ENG.		3/4/71
MGR.		3/25/71

NEXT HIGHER ASSY
A-ML-DB11-A-Ø

SCALE

SHEET OF

DIGITAL EQUIPMENT CORPORATION
MAYNARD MASSACHUSETTS

TITLE
BUS AND POWER CONNECTIONS

SIZE	CODE	NUMBER	REV.
D	IC	DB11-A-Ø4	B

DIST.

REV	DATE	BY
B		

SIZE CODE D IC NUMBER DB11-A-Ø4

This drawing and specifications, herein, are the property of Digital Equipment Corporation and shall not be reproduced or copied or used in whole or in part as the basis for the manufacture or sale of items without written permission.

M7213 CD03 MASTER CONTROL CARD

CM1 DF1 CS1 CE1

LEFT BUS C1 L	DS1	DN2	RIGHT BUS C1 L
LEFT BUS C0 L	DR2	DS2	RIGHT BUS C0 L
LEFT BUS INIT L	CK2	CL1	RIGHT BUS INIT L
LEFT BUS MSYN L	DL2	DK1	RIGHT BUS MSYN L
LEFT BUS SSYN L	DJ2	DH2	RIGHT BUS SSYN L
LEFT BUS PA L	DD1	DE1	RIGHT BUS PA L
LEFT BUS PB L	DD2	DE2	RIGHT BUS PB L
LEFT BUS DC LO L	CU2	CT2	RIGHT BUS DC LO L
LEFT NPG BUF L	CD1	CB1	RIGHT BUS NPG H
LEFT BG 7 BUF L	CE2	CD2	RIGHT BG 7 BUF L
LEFT BG 6 BUF L	CH2	CH1	RIGHT BG 6 BUF L
LEFT BG 5 BUF L	CF2	CC1	RIGHT BG 5 BUF L
LEFT BG 4 BUF L	CJ2	CF1	RIGHT BG 4 BUF L
RIGHT BUS INTR L	CN1	CP1	LEFT BUS INTR L
RIGHT BUS SACK L	CN2	CR2	LEFT BUS SACK L
RIGHT BUS AC LO L	CK1	CM2	LEFT BUS AC LO L

CV2 DL1 LT2 CA1

D. LINE RIGHT TO LEFT ENABLE L
D. LINE LEFT TO RIGHT ENABLE L
A. LINE RIGHT TO LEFT ENABLE L
A. LINE LEFT TO RIGHT ENABLE L

M785 EØ4 DATA LINES

SI

LEFT BUS DØØ L	EC1	ED2 FB1	FC1	RIGHT BUS DØØ L
LEFT BUS DØ1 L	EE2	EF2 FA1	FE2	RIGHT BUS DØ1 L
LEFT BUS DØ2 L	FH2	EJ2 FE1	FH2	RIGHT BUS DØ2 L
LEFT BUS DØ3 L	EK2	EL2 FD1	FK2	RIGHT BUS DØ3 L
LEFT BUS DØ4 L	EM2	EN2 FM1	FM2	RIGHT BUS DØ4 L
LEFT BUS DØ5 L	EP2	ER2 FL1	FP2	RIGHT BUS DØ5 L
LEFT BUS DØ6 L	ES2	ET2 FR1	FS2	RIGHT BUS DØ6 L
LEFT BUS DØ7 L	EU2	EV2 FP1	FU2	RIGHT BUS DØ7 L

M785 FØ4 DATA LINES

SI

M785 EØ3 DATA LINES

SI

LEFT BUS DØ8 L	EC1	ED2 FB1	FC1	RIGHT BUS DØ8 L
LEFT BUS DØ9 L	EE2	EF2 FA1	FE2	RIGHT BUS DØ9 L
LEFT BUS DI0 L	EH2	EJ2 FE1	FH2	RIGHT BUS DI0 L
LEFT BUS DI1 L	EK2	EL2 FD1	FK2	RIGHT BUS DI1 L
LEFT BUS DI2 L	EM2	EN2 FM1	FM2	RIGHT BUS DI2 L
LEFT BUS DI3 L	EP2	ER2 FL1	FP2	RIGHT BUS DI3 L
LEFT BUS DI4 L	ES2	ET2 FR1	FS2	RIGHT BUS DI4 L
LEFT BUS DI5 L	EU2	EV2 FP1	FU2	RIGHT BUS DI5 L

M785 FØ3 DATA LINES

SI

M7248 CØ1

LEFT BUS BBSY L — C1 — U2 — RIGHT BUS BBSY L

P2 — A ENABLE LEFT TO RIGHT

S2 — A ENABLE RIGHT TO LEFT

N2

M7212 DØ1 ADDRESS LINES

LEFT BUS AØØ L	P2	C1	RIGHT BUS AØØ L
LEFT BUS AØ1 L	B1	N2	RIGHT BUS AØ1 L
LEFT BUS AØ2 L	S2	F1	RIGHT BUS AØ2 L
LEFT BUS AØ3 L	P1	E1	RIGHT BUS AØ3 L
LEFT BUS AØ4 L	U2	L1	RIGHT BUS AØ4 L
LEFT BUS AØ5 L	U1	K1	RIGHT BUS AØ5 L

M7212 EØ1 ADDRESS LINES

LEFT BUS AØ6 L	P2	C1	RIGHT BUS AØ6 L
LEFT BUS AØ7 L	B1	N2	RIGHT BUS AØ7 L
LEFT BUS AØ8 L	S2	F1	RIGHT BUS AØ8 L
LEFT BUS AØ9 L	P1	E1	RIGHT BUS AØ9 L
LEFT BUS AI0 L	U2	L1	RIGHT BUS AI0 L
LEFT BUS AI1 L	U1	K1	RIGHT BUS AI1 L

M7212 FØ1 ADDRESS LINES

LEFT BUS AI2 L	P2	C1	RIGHT BUS AI2 L
LEFT BUS AI3 L	B1	N2	RIGHT BUS AI3 L
LEFT BUS AI4 L	S2	F1	RIGHT BUS AI4 L
LEFT BUS AI5 L	P1	E1	RIGHT BUS AI5 L
LEFT BUS AI6 L	U2	L1	RIGHT BUS AI6 L
LEFT BUS AI7 L	U1	K1	RIGHT BUS AI7 L

D1 A1

M784 EØ2 UNIDIRECTIONAL LINES

LEFT BUS NPG H	C1	D2	LEFT NPG BUF L
LEFT BUS BG 7 H	E2	F2	LEFT BG 7 BUF L
LEFT BUS BG 6 H	H2	J2	LEFT BG 6 BUF L
LEFT BUS BG 5 H	K2	L2	LEFT BG 5 BUF L
LEFT BUS BG 4 H	M2	N2	LEFT BG 4 BUF L
RIGHT NPR L	A1	B1	
RIGHT BR 7 L	D1	E1	
RIGHT BR 6 L	F1	H1	
RIGHT BR 5 L	J1	K1	
RIGHT BR 4 L	L1	M1	

M783 FØ2 UNIDIRECTIONAL LINES

		B1	C1	LEFT NPR L
		A1	E2	LEFT BUS BR 7 L
		E1	H2	LEFT BUS BR 6 L
		H1	K2	LEFT BUS BR 5 L
		K1	M2	LEFT BUS BR 4 L
RIGHT BG 7 BUF L	J1		K1	RIGHT BUS BG 7 H
RIGHT BG 6 BUF L	L2		N2	RIGHT BUS BG 6 H
RIGHT BG 5 BUF L	S1		T2	RIGHT BUS BG 5 H
RIGHT BG 4 BUF L	V2		F2	RIGHT BUS BG 4 H

D1 V1 H1 F1

M930 ABØ2

LEFT BUS AØØ L	BH2
LEFT BUS AØ1 L	BH1
LEFT BUS AØ2 L	BJ2
LEFT BUS AØ3 L	BJ1
LEFT BUS AØ4 L	BK2
LEFT BUS AØ5 L	BK1
LEFT BUS AØ6 L	BL2
LEFT BUS AØ7 L	BL1
LEFT BUS AØ8 L	BM2
LEFT BUS AØ9 L	BM1
LEFT BUS AI0 L	BN2
LEFT BUS AI1 L	BN1
LEFT BUS AI2 L	BP2
LEFT BUS AI3 L	BP1
LEFT BUS AI4 L	BR2
LEFT BUS AI5 L	BR1
LEFT BUS AI6 L	BS2
LEFT BUS AI7 L	BS1
LEFT BUS BBSY L	AP2
LEFT BUS BG 4 H	BE2
LEFT BUS BG 5 H	BB1
LEFT BUS BG 6 H	BA1
LEFT BUS BG 7 H	AV1
LEFT BUS BR 4 L	BD2
LEFT BUS BR 5 L	BC1
LEFT BUS BR 6 L	AU2
LEFT BUS BR 7 L	AT2
LEFT BUS C0 L	RU2
LEFT BUS C1 L	BT2
LEFT BUS DØØ L	AC1
LEFT BUS DØ1 L	AD2
LEFT BUS DØ2 L	AD1
LEFT BUS DØ3 L	AE2
LEFT BUS DØ4 L	AE1
LEFT BUS DØ5 L	AF2
LEFT BUS DØ6 L	AF1
LEFT BUS DØ7 L	AH2
LEFT BUS DØ8 L	AH1
LEFT BUS DØ9 L	AJ2
LEFT BUS DI0 L	AJ1
LEFT BUS DI1 L	AK2
LEFT BUS DI2 L	AK1
LEFT BUS DI3 L	AL2
LEFT BUS DI4 L	AL1
LEFT BUS DI5 L	AM2
LEFT BUS INIT L	AA1
LEFT BUS INTR L	AB1
LEFT BUS MSYN L	BV1
LEFT BUS NPG H	AU1
LEFT BUS NPR L	AS2
LEFT BUS PA L	AM1
LEFT BUS PB L	AN2
LEFT BUS SACK L	AR2
LEFT BUS AC LO L	BF1
LEFT BUS DC LO L	BF2
LEFT BUS SSYN L	BU1

M930 CDØ4

RIGHT BUS AØ3 L	DH2
RIGHT BUS AØ1 L	DH1
RIGHT BUS AØ2 L	DJ2
RIGHT BUS AØ3 L	DJ1
RIGHT BUS AØ4 L	DK2
RIGHT BUS AØ5 L	DK1
RIGHT BUS AØ6 L	DL2
RIGHT BUS AØ7 L	DL1
RIGHT BUS AØ8 L	DM2
RIGHT BUS AØ9 L	DM1
RIGHT BUS AI0 L	DN2
RIGHT BUS AI1 L	DN1
RIGHT BUS AI2 L	DP2
RIGHT BUS AI3 L	DP1
RIGHT BUS AI4 L	DR2
RIGHT BUS AI5 L	DR1
RIGHT BUS AI6 L	DS2
RIGHT BUS AI7 L	DS1
RIGHT BUS BBSY L	CP2
RIGHT BUS BG 4 H	DE2
RIGHT BUS BG 5 H	DB1
RIGHT BUS BG 6 H	DA1
RIGHT BUS BG 7 H	CV1
RIGHT BUS BR 4 L	DD2
RIGHT BUS BR 5 L	DC1
RIGHT BUS BR 6 L	CU2
RIGHT BUS BR 7 L	CT2
RIGHT BUS C0 L	DD2
RIGHT BUS C1 L	DT2
RIGHT BUS DØØ L	CC1
RIGHT BUS DØ1 L	DD2
RIGHT BUS DØ2 L	CD1
RIGHT BUS DØ3 L	CE2
RIGHT BUS DØ4 L	CE1
RIGHT BUS DØ5 L	CF2
RIGHT BUS DØ6 L	CF1
RIGHT BUS DØ7 L	CH2
RIGHT BUS DØ8 L	CH1
RIGHT BUS DØ9 L	CJ2
RIGHT BUS DI0 L	CJ1
RIGHT BUS DI1 L	CK2
RIGHT BUS DI2 L	CK1
RIGHT BUS DI3 L	CL2
RIGHT BUS DI4 L	CL1
RIGHT BUS DI5 L	CM2
RIGHT BUS INIT L	CA1
RIGHT BUS INTR L	CB1
RIGHT BUS MSYN L	DV1
RIGHT BUS NPG H	CU1
RIGHT BUS NPR L	CS2
RIGHT BUS PA L	CM1
RIGHT BUS PB L	CN2
RIGHT BUS SACK L	CR2
RIGHT BUS DC LO L	CT2
RIGHT BUS AC LO L	CF1
RIGHT BUS SSYN L	DU1

REVISIONS			
CHK	CHANGE NO	REV	
	DB11A-00001	A	
BASTIANI 6/21/71			
	DB11A-00003	B	
BASTIANI 8/13/71			
	DB11A-00008	B	
T. REILLY 8/31/71			

DEC FORM NO 5RD 1009

FIRST USED ON OPTION/MODEL: PDP11

UNLESS OTHERWISE SPECIFIED

UNLESS OTHERWISE SPECIFIED DIMENSION IN INCHES TOLERANCES DECIMALS .XX ±.01 .XXX ±.005 FRACTIONS ±1/64 ANGLES ±1° FINAL SURFACE QUALITY √ REMOVE BURRS AND BREAK SHARP CORNERS

MATERIAL

FINISH

QTY	DESCRIPTION	PART NO	ITEM NO
PARTS LIST			

DRN — DATE 8/3-71
CHK'D — DATE 8/4/71
ENG. — DATE 8/4/71
PROJ ENG — DATE
PROD — DATE 8/25/71

NEXT HIGH ASSY: A-ML-DB11-A

SCALE

SHEET 1 OF 1

digital EQUIPMENT CORPORATION

TITLE: DB11 INTERCONNECTION DIAGRAM

SIZE D | CODE BD | NUMBER DB11-A-05 | REV C

DIST

DRWG NO	REV LTR
K-WL-DB11-A-Ø6	H

REVISIONS

REV LTR	ECO NO	DATE	ENG
A	DB11A-00001	6-1-71	VB
B	DB11A-00003	9-10-71	VB
C	DB11A-00004	1-26-72	VB
D	DB11A-00005	6-14-72	VB
E	DB11A-00006	8-3-73	[illegible]
F	DB11A-00007	10-17-73	[illegible]
H	DB11A-00009	12-17-73	

DRAWN Murdock McKenzie	DATE 3/3/71	digital EQUIPMENT CORPORATION MAYNARD, MASSACHUSETTS
CHECKED [illegible]	DATE 3/4/71	
ENG V Bostian	DATE 3/16/71	
PROJ ENG V Bostian	DATE 3/[illegible]/71	
PROD A. Hirsch	DATE 3/24/71	

TITLE WIRE LIST

FOR TAPE* FILE*

ASSY NO D-AD-7008311-0-0

SIZE K | CODE WL | DWG NO. DB11-A-Ø6 | REV LTR H

SCALE — | SHEET 1 OF 1 | DIST.

RUN NAME	A/P	PIN NAME	ORDER PIN	BAY - ORDER	Q	DRAW	RV	PG	Y	X	Z	REMARKS	LENGTH	EXCEPTIONS	RUN NUMBER
+3V		F02V1		1-01 *	2						2				
+3V		F02U1		1-02 *							1				1
+3V		F02K2		1-03 *							2				1
+3V		F02N1		1-04 *							1				1
+3V		F02J2		1-05 *							2				1
+3V		F02H1		1-06 *							1				1
+3V		F02F1		1-07 *											1
+3V				1									16-4/8		1
A FN LEFT TO RIGHT		C01P2		1-01 *							2				2
A FN LEFT TO RIGHT		C03V2		1-02 *							1				2
A FN LEFT TO RIGHT		D01A1	E01A1	1-03 *							2				2
A FN LEFT TO RIGHT		E01A1		1-04 *							1		2-3		2
A FN LEFT TO RIGHT		F01A1		1-05 *											2
A FN LEFT TO RIGHT				1									17-7/8		2
A FN RIGHT TO LEFT		D01D1	C01S2	1-01 *	2						2		1-7		3
A FN RIGHT TO LEFT		C01S2		1-02 *							1				3
A FN RIGHT TO LEFT		D03L1	E01D1	1-03 *							2				3
A FN RIGHT TO LEFT		E01D1		1-04 *							1		2-4		3
A FN RIGHT TO LEFT		F01D1		1-05 *											3
A FN RIGHT TO LEFT				1									19-2/8		3
AA2		A02A2	A01A2	1-01 *							2				4
AA2		A01A2		1-02 *							1		2-5		4
AA2		B01A2		1-03 *							2				4
AA2		B02A2		1-04 *											4
AA2				1									11-3/8		4
AB2		A01B2		1-01 *							1				5
AB2		A02B2		1-02 *							2				5
AB2		A04B2		1-03 *							1				5
AB2		C04B2		1-04 *											5
AB2				1									13-4/8		5
AN1		A01N1		1-01 *							1				6
AN1		A02N1	A04N1	1-02 *							2				6
AN1		A04N1		1-03 *							1		3-6		6
AN1		C04N1		1-04 *											6
AN1				1									14-1/8		6
AP1		A01P1		1-01 *							1				7
AP1		A02P1	A04P1	1-02 *							2				7
AP1		A04P1		1-03 *							1		3-7		7
AP1		C04P1		1-04 *											7
AP1				1									14-3/8		7

RUN NAME	A/P	PIN NAME	ORDER PIN	BAY - ORDER	Q	DRAW	RV	PG	Y	X	Z	REMARKS	LENGTH	EXCEPTIONS	RUN NUMBER
AR1		A01R1		1-01 *							1				8
AR1		A02R1	A04R1	1-02 *							2				8
AR1		A04R1		1-03 *							1		3-6		8
AR1		C04R1		1-04 *											8
AR1				1									14-1/8		8
AS1		A01S1		1-01 *							1				9
AS1		A02S1	A04S1	1-02 *							2				9
AS1		A04S1		1-03 *							1		3-7		9
AS1		C04S1		1-04 *											9
AS1				1									14-3/8		9
AV2		A01V2		1-01 *							1				10
AV2		A02V2		1-02 *							2				10
AV2		A04V2		1-03 *							1				10
AV2		C04V2		1-04 *											10
AV2				1									13-4/8		10
B INIT		C03J1												1-PIN RUN	11
BB2		B01B2		1-01 *							1				12
BB2		B02B2		1-02 *							2				12
BB2		B04B2		1-03 *							1				12
BB2		D04B2		1-04 *											12
BB2				1									13-4/8		12
BD1		B01D1		1-01 *							1				13
BD1		B02D1	B04D1	1-02 *							2				13
BD1		B04D1		1-03 *							1		3-6		13
BD1		D04D1		1-04 *											13
BD1				1									14-1/8		13
BE1		B01E1		1-01 *							1				14
BE1		B02E1	B04E1	1-02 *							2				14
BE1		B04E1		1-03 *							1		3-7		14
BE1		D04E1		1-04 *											14
BE1				1									14-3/8		14
BV2		A01C2		1-01 *							2				15
BV2		A01T1		1-02 *							1				15
BV2		B01C2		1-03 *							2				15
BV2		B01T1		1-04 *							1				15
BV2		B01V2		1-05 *							2				15
BV2		B02V2		1-06 *							1				15
BV2		B04V2		1-07 *							2				15
BV2		D04V2		1-08 *											15
BV2				1									27-6/8		15

RUN NAME	A/P	PIN NAME	ORDER PIN	BAY - ORDER	Q	DRAW	RV	PG	Y	X	Z	REMARKS	LENGTH	EXCEPTIONS	RUN NUMBER
CA2		A04A2		1-01 *	1						1		2-3		16
CA2		B04A2	C04A2	1-02 *							2				16
CA2		C04A2		1-03 *							1		2-3		16
CA2		D04A2		1-04 *											16
CA2				1									15-4/8		16
D LEFT TO RIGHT EN		D03I2		1-01 *							1		3-7		17
D LEFT TO RIGHT EN		F04S1		1-02 *							2				17
D LEFT TO RIGHT EN		F03S1		1-03 *											17
D LEFT TO RIGHT EN				1									11-1/8		17
D RIGHT TO LEFT EN		C03A1		1-01 *							1				18
D RIGHT TO LEFT EN		F03S1		1-02 *							2				18
D RIGHT TO LEFT EN		F04S1		1-03 *											18
D RIGHT TO LEFT EN				1									12-0/8		18
E2B1		E02B1		1-01 *							1		2-7		19
E2B1		F02B1		1-02 *											19
E2B1				1									6-3/8		19
E2E1		E02E1		1-01 *							1		2-5		20
E2E1		F02A1		1-02 *											20
E2F1				1									5-7/8		20
E2H1		F02H1		1-01 *							1		2-5		21
E2H1		F02E1		1-02 *											21
E2H1				1									5-7/8		21
E2K1		E02K1		1-01 *							1		2-4		22
E2K1		F02D1		1-02 *											22
E2K1				1									5-5/8		22
E2M1		E02M1		1-01 *							1		2-5		23
E2M1		F02M1		1-02 *											23
E2M1				1									5-7/8		23
E3		E03J1		1-01 *							1				24
E3		E03K1		1-02 *							2				24
E3		F03U1	D03B1	1-03 *							1				24
E3		D03B1		1-04 *											24
E3				1									12-4/8		24
E3A1		E03A1		1-01 *							1		3-2		25
E3A1		F03F2		1-02 *											25
E3A1				1									7-1/8		25

RUN NAME	A/P	PIN NAME	ORDER PIN	BAY - ORDER	J	DRAW RV PG Y	X	Z	REMARKS	LENGTH	EXCEPTIONS	RUN NUMBER
E3B1		F03M1		1-01 *				1		2-7		26
E3B1		F03D2		1-02 *								26
E3B1				1						6-3/8		26
E3D1		F03D1		1-01 *				1		3-2		27
E3D1		F03L2		1-02 *								27
E3D1				1						7-1/8		27
E3D2		E03D2		1-01 *				1				28
E3D2		F03B1		1-02 *								28
E3D2				1						5-0/8		28
E3E1		F03E1		1-01 *				1		3-1		29
E3E1		F03J2		1-02 *								29
E3E1				1						6-7/8		29
E3F2		F03F2		1-01 *				1				30
E3F2		F03A1		1-02 *								30
E3F2				1						4-6/8		30
E3J2		F03J2		1-01 *				1				31
E3J2		F03E1		1-02 *								31
E3J2				1						5-0/8		31
E3L1		F03L1		1-01 *				1		3-1		32
E3L1		F03R2		1-02 *								32
E3L1				1						5-7/8		32
E3L2		E03L2		1-01 *				1				33
E3L2		F03D1		1-02 *								33
E3L2				1						4-4/8		33
E3M1		F03M1		1-01 *				1		3-0		34
E3M1		F03N2		1-02 *								34
E3M1				1						6-5/8		34
E3N2		E03N2		1-01 *				1				35
E3N2		F03M1		1-02 *								35
E3N2				1						5-2/8		35
E3P1		E03P1		1-01 *				1		3-2		36
E3P1		F03V2		1-02 *								36
E3P1				1						7-1/8		36
E3R1		E03R1		1-01 *				1		2-7		37
E3R1		F03T2		1-02 *								37
E3R1				1						6-3/8		37

RUN NAME	A/P	PIN NAME	ORDER PIN	BAY - ORDER	Q	DRAW RV PG Y	X	Z	REMARKS	LENGTH	EXCEPTIONS	RUN NUMBER
E3R2		F03R2		1-01 *				1				38
E3R2		F03L1		1-02 *								38
E3R2				1						4-6/8		38
E3T2		E03T2		1-01 *				1				39
E3T2		F03R1		1-02 *								39
E3T2				1						5-0/8		39
E3V2		E03V2		1-01 *				1				40
E3V2		F03P1		1-02 *								40
E3V2				1						4-6/8		40
E4		E04D2		1-01 *				1				41
E4		F04B1		1-02 *								41
E4				1						5-0/8		41
E4P1		E04P1		1-01 *				1				42
E4P1		F04V2		1-02 *								42
E4P1				1						6-0/8		42
E4R1		E04R1		1-01 *				1				43
E4R1		F04T2		1-02 *								43
E4R1				1						5-4/8		43
E4U1		E04J1		1-01 *				1				44
E4U1		E04K1		1-02 *				2				44
E4U1		E04U1	D03C1	1-03 *				1				44
E4U1		D03C1		1-04 *								44
E4U1				1						12-4/8		44
E4V2		E04V2		1-01 *				1				45
E4V2		F04P1		1-02 *								45
E4V2				1						4-6/8		45
EA		E04A1		1-01 *				1				46
EA		F04F2		1-02 *								46
EA				1						6-0/8		46
EB		E04B1		1-01 *				1				47
EB		F04D2		1-02 *								47
EB				1						5-4/8		47
ED		E04D1		1-01 *				1				48
ED		F04L2		1-02 *								48
ED				1						6-0/8		48

RUN NAME	A/P	PIN NAME	ORDER PIN	BAY - ORDER	Q	DRAW	RV	PG	Y	X	Z	REMARKS	LENGTH	EXCEPTIONS	RUN NUMBER
EE		F04E1		1-01 *							1				49
EE		F04J2		1-02 *											49
EE				1									5-6/8		49
EF		F04F2		1-01 *							1				50
FF		F04A1		1-02 *											50
EF				1									4-6/8		50
FJ		F04J2		1-01 *							1				51
FJ		F04E1		1-02 *											51
FJ				1									5-0/8		51
FK		F04L1		1-01 *							1				52
EK		F04R2		1-02 *											52
FK				1									5-6/8		52
FL		F04L2		1-01 *							1				53
EL		F04D1		1-02 *											53
FL				1									4-4/8		53
EM		F04P1		1-01 *							1				54
FM		F04N2		1-02 *											54
EM				1									5-4/8		54
EN		F04N2		1-01 *							1				55
FN		F04M1		1-02 *											55
EN				1									5-2/8		55
ER		F04R2		1-01 *							1				56
ER		F04L1		1-02 *											56
FR				1									4-6/8		56
ET		F04T2		1-01 *							1				57
ET		F04R1		1-02 *											57
ET				1									5-0/8		57
F3		F03J1		1-01 *							1				58
F3		F03K1		1-02 *							2				58
F3		F03U1		1-03 *											58
F3				1									5-6/8		58
F4		F04J1		1-01 *							1				59
F4		F04K1		1-02 *							2				59
F4		F04U1		1-03 *											59
F4				1									5-6/8		59

RUN NAME	A/P	PIN NAME	ORDER PIN	BAY - ORDER	Q	DRAW	RV	PG	Y	X	Z	REMARKS	LENGTH	EXCEPTIONS	RUN NUMBER
GND		F03C2		1-01 *							1				60
GND		F03H1		1-02 *							2				60
GND		F03F1		1-03 *							1				60
GND		F04H1		1-04 *							2				60
GND		F04F1		1-05 *							1				60
GND		F04C2		1-06 *							2				60
GND		F04C2		1-07 *							1				60
GND		F04H1		1-08 *							2				60
GND		F04F1		1-09 *							1				60
GND		F03C2		1-10 *							2				60
GND		F03F1		1-11 *							1				60
GND		F03H1		1-12 *											60
GND				1									32-2/8		60
INHIBIT ACLO		C03E1		1-01 *							1				61
INHIBIT ACLO		C03C2		1-02 *											61
INHIBIT ACLO				1									2-6/8		61
INHIBIT BUS		D03F1		1-01 *							1				62
INHIBIT BUS		D03C2	C01N2	1-02 *							2				62
INHIBIT BUS		C01N2	C01C2	1-03 *							1				62
INHIBIT BUS		C01C2		1-04 *											62
INHIBIT BUS				1									10-4/8		62
INHIBIT DCLO		C03T1		1-01 *							1				63
INHIBIT DCLO		C03S1		1-02 *											63
INHIBIT DCLO				1									2-4/8		63
INHIBIT INIT		C03M1		1-01 *							1				64
INHIBIT INIT		D03I1		1-02 *											64
INHIBIT INIT				1									5-6/8		64
L B D00		A01C1	A02C1	1-01 *							2				65
L B D00		A02C1		1-02 *							1		6-4		65
L B D00		E04C1		1-03 *											65
L B D00				1									16-3/8		65
L B D01		A01D2		1-01 *							2				66
L B D01		A02D2		1-02 *							1				66
L B D01		E04E2		1-03 *											66
L B D01				1									16-0/8		66
L B D02		A01D1	A02D1	1-01 *							2				67
L B D02		A02D1		1-02 *							1		6-6		67
L B D02		E04H2		1-03 *											67
L B D02				1									16-7/8		67

RUN NAME	A/P	PIN NAME	ORDER PIN	BAY - ORDER	Q	DRAW	RV	PG	Y	X	Z	REMARKS	LENGTH	EXCEPTIONS	RUN NUMBER
L B D03		A01E2	A02E2	1-01 *							2				68
L B D03		A02E2		1-02 *							1		6-6		68
L B D03		E04K2		1-03 *											68
L B D03				1									16-7/8		68
L B D04		A01E1		1-01 *							2				69
L B D04		A02E1		1-02 *							1				69
L B D04		E04M2		1-03 *											69
L B D04				1									17-0/8		69
L B D05		A01F2	A02F2	1-01 *							2				70
L B D05		A02F2		1-02 *							1		6-7		70
L B D05		E04P2		1-03 *											70
L B D05				1									17-1/8		70
L B D06		A01F1		1-01 *							2				71
L B D06		A02F1		1-02 *							1				71
L B D06		E04S2		1-03 *											71
L B D06				1									17-2/8		71
L B D07		A01H2		1-01 *							2				72
L B D07		A02H2		1-02 *							1				72
L B D07		E04U2		1-03 *											72
L B D07				1									17-2/8		72
L B D08		A01H1		1-01 *							2				73
L B D08		A02H1		1-02 *							1				73
L B D08		E03C1		1-03 *											73
L B D08				1									15-2/8		73
L B D09		A01J2		1-01 *							2				74
L B D09		A02J2		1-02 *							1				74
L B D09		E03E2		1-03 *											74
L B D09				1									15-4/8		74
L B D10		A01J1		1-01 *							2				75
L B D10		A02J1		1-02 *							1				75
L B D10		E03H2		1-03 *											75
L B D10				1									15-6/8		75
L B D11		A01K2		1-01 *							2				76
L B D11		A02K2		1-02 *							1				76
L B D11		E03K2		1-03 *											76
L B D11				1									15-6/8		76

RUN NAME	A/P	PIN NAME	ORDER PIN	BAY - ORDER	Q	DRAW	RV	PG	Y	X	Z	REMARKS	LENGTH	EXCEPTIONS	RUN NUMBER
L B D12		A01K1		1-01 *							2				77
L B D12		A02K1		1-02 *							1				77
L B D12		E03M2		1-03 *											77
L B D12				1									16-2/8		77
L B D13		A01L2		1-01 *							2				78
L B D13		A02L2		1-02 *							1				78
L B D13		E03P2		1-03 *											78
L B D13				1									16-2/8		78
L B D14		A01L1		1-01 *							2				79
L B D14		A02L1		1-02 *							1				79
L B D14		E03S2		1-03 *											79
L B D14				1									16-4/8		79
L B D15		A01M2		1-01 *							2				80
L B D15		A02M2		1-02 *							1				80
L B D15		E03U2		1-03 *											80
L B D15				1									16-4/8		80
LEFT A00		B02H2	B01H2	1-01 *							2				81
LEFT A00		B01H2		1-02 *							1		4-1		81
LEFT A00		D01P2		1-03 *											81
LEFT A00				1									11-5/8		81
LEFT A01		B02H1		1-01 *							2				82
LEFT A01		B01H1		1-02 *							1				82
LEFT A01		D01B1		1-03 *											82
LEFT A01				1									9-6/8		82
LEFT A02		B02J2		1-01 *							2				83
LEFT A02		B01J2		1-02 *							1				83
LEFT A02		D01S2		1-03 *											83
LEFT A02				1									11-2/8		83
LEFT A03		B02J1		1-01 *							2				84
LEFT A03		B01J1		1-02 *							1				84
LEFT A03		D01P1		1-03 *											84
LEFT A03				1									11-0/8		84
LEFT A04		B02K2		1-01 *							2				85
LEFT A04		B01K2		1-02 *							1				85
LEFT A04		D01U2		1-03 *											85
LEFT A04				1									11-2/8		85

RUN NAME	A/P	PIN NAME	ORDER PIN	BAY - ORDER	Q	DRAW RV PG	Y	X	Z	REMARKS	LENGTH	EXCEPTIONS	RUN NUMBER
LEFT A05		B02K1		1-01 *					2				86
LEFT A05		B01K1		1-02 *					1				86
LEFT A05		D01U1		1-03 *									86
LEFT A05				1							11-2/8		86
LEFT A06		B02L2		1-01 *					2				87
LEFT A06		B01L2		1-02 *					1				87
LEFT A06		E01P2		1-03 *									87
LEFT A06				1							13-2/8		87
LEFT A07		B02L1	B01L1	1-01 *					2				88
LEFT A07		B01L1		1-02 *					1		4-3		88
LEFT A07		E01B1		1-03 *									88
LEFT A07				1							12-1/8		88
LEFT A08		B02M2		1-01 *					2				89
LEFT A08		B01M2		1-02 *					1				89
LEFT A08		E01S2		1-03 *									89
LEFT A08				1							13-2/8		89
LEFT A09		B02M1		1-01 *					2				90
LEFT A09		B01M1		1-02 *					1				90
LEFT A09		E01P1		1-03 *									90
LEFT A09				1							13-0/8		90
LEFT A10		B02N2		1-01 *					2				91
LEFT A10		B01N2		1-02 *					1				91
LEFT A10		E01U2		1-03 *									91
LEFT A10				1							13-4/8		91
LEFT A11		B02N1		1-01 *					2				92
LEFT A11		B01N1		1-02 *					1				92
LEFT A11		E01U1		1-03 *									92
LEFT A11				1							13-4/8		92
LEFT A12		B02P2	B01P2	1-01 *					2				93
LEFT A12		B01P2		1-02 *					1		6-3		93
LEFT A12		F01P2		1-03 *									93
LEFT A12				1							16-1/8		93
LEFT A13		B02P1		1-01 *					2				94
LEFT A13		B01P1		1-02 *					1				94
LEFT A13		F01B1		1-03 *									94
LEFT A13				1							14-2/8		94

RUN NAME	A/P	PIN NAME	ORDER PIN	BAY - ORDER	Q	DRAW RV PG	Y	X	Z	REMARKS	LENGTH	EXCEPTIONS	RUN NUMBER
LEFT A14		B02R2	B01R2	1-01 *					2				95
LEFT A14		B01R2		1-02 *					1		6-4		95
LEFT A14		F01S2		1-03 *									95
LEFT A14				1							16-3/8		95
LEFT A15		B02R1		1-01 *					2				96
LEFT A15		B01R1		1-02 *					1				96
LEFT A15		F01P1		1-03 *									96
LEFT A15				1							15-4/8		96
LEFT A16		B02S2	B01S2	1-01 *					2				97
LEFT A16		B01S2		1-02 *					1		6-4		97
LEFT A16		F01U2		1-03 *									97
LEFT A16				1							16-3/8		97
LEFT A17		B02S1	B01S1	1-01 *					2				98
LEFT A17		B01S1		1-02 *					1		6-3		98
LEFT A17		F01U1		1-03 *									98
LEFT A17				1							16-1/8		98
LEFT BG4		B01E2		1-01 *					2				99
LEFT BG4		B02E2		1-02 *					1				99
LEFT BG4		F02M2		1-03 *									99
LEFT BG4				1							13-4/8		99
LEFT BG4 BUF		C03J2		1-01 *					1				100
LEFT BG4 BUF		E02N2		1-02 *									100
LEFT BG4 BUF				1							8-2/8		100
LEFT BG5		B01B1		1-01 *					2				101
LEFT BG5		B02B1		1-02 *					1				101
LEFT BG5		E02K2		1-03 *									101
LEFT BG5				1							13-6/8		101
LEFT BG5 BUF		C03F2		1-01 *					1				102
LEFT BG5 BUF		E02L2		1-02 *									102
LEFT BG5 BUF				1							8-2/8		102
LEFT BG6		B01A1		1-01 *					2				103
LEFT BG6		B02A1		1-02 *					1				103
LEFT BG6		E02H2		1-03 *									103
LEFT BG6				1							13-6/8		103
LEFT BG6 BUF		C03H2		1-01 *					1				104
LEFT BG6 BUF		E02J2		1-02 *									104
LEFT BG6 BUF				1							8-0/8		104

RUN NAME	A/P	PIN NAME	ORDER PIN	BAY - ORDER	Q	DRAW	RV	PG	Y	X	Z	REMARKS	LENGTH	EXCEPTIONS	RUN NUMBER
LEFT BG7		A01V1	A02V1	1-01 *							2				105
LEFT BG7		A02V1		1-02 *							1		6-0		105
LEFT BG7		E02E2		1-03 *											105
LEFT BG7				1									15-3/8		105
LEFT BG7 BUF		C03E2		1-01 *							1				106
LEFT BG7 BUF		E02F2		1-02 *											106
LEFT BG7 BUF				1									8-0/8		106
LEFT BR4		B01D2		1-01 *							2				107
LEFT BR4		B02D2		1-02 *							1				107
LEFT BR4		F02M2		1-03 *											107
LEFT BR4				1									16-4/8		107
LEFT BR5		B01C1		1-01 *							2				108
LEFT BR5		B02C1		1-02 *							1				108
LEFT BR5		F02K2		1-03 *											108
LEFT BR5				1									16-4/8		108
LEFT BR6		A01U2	A02U2	1-01 *							2				109
LEFT BR6		A02U2		1-02 *							1		7-5		109
LEFT BR6		F02H2		1-03 *											109
LEFT BR6				1									18-5/8		109
LEFT BR7		A01T2		1-01 *							2				110
LEFT BR7		A02T2		1-02 *							1				110
LEFT BR7		F02E2		1-03 *											110
LEFT BR7				1									17-0/8		110
LEFT BUF BRSY		D03A1												1-PIN RUN	111
LEFT BUF C00		D03P2												1-PIN RUN	112
LEFT BUF C01		D03M2												1-PIN RUN	113
LEFT BUF DCLO		C03R1												1-PIN RUN	114
LEFT BUF MSYN		D03H1												1-PIN RUN	115
LEFT BUF SSYN		D03F2												1-PIN RUN	116
LEFT BUS ACLO		B01F1		1-01 *							2				117
LEFT BUS ACLO		B02F1		1-02 *							1				117
LEFT BUS ACLO		C03M2	A03R2	1-03 *							2				117
LEFT BUS ACLO		A03R2		1-04 *											117
LEFT BUS ACLO				1									15-6/8		117

RUN NAME	A/P	PIN NAME	ORDER PIN	BAY - ORDER	Q	DRAW	RV	PG	Y	X	Z	REMARKS	LENGTH	EXCEPTIONS	RUN NUMBER
LEFT BUS BRSY		A01P2	A02P2	1-01 *							2				118
LEFT BUS BRSY		A02P2	C01C1	1-02 *							1		3-2		118
LEFT BUS BRSY		C01C1		1-03 *											118
LEFT BUS BRSY				1									9-7/8		118
LEFT BUS C00		B01U2		1-01 *							2				119
LEFT BUS C00		B02U2		1-02 *							1				119
LEFT BUS C00		D03R2		1-03 *											119
LEFT BUS C00				1									10-2/8		119
LEFT BUS C01		B02T2		1-01 *							2				120
LEFT BUS C01		B01T2	D03S1	1-02 *							1				120
LEFT BUS C01		D03S1		1-03 *											120
LEFT BUS C01				1									10-4/8		120
LEFT BUS DCLO		B01F2		1-01 *							2				121
LEFT BUS DCLO		B02F2		1-02 *							1				121
LEFT BUS DCLO		C03U2	A03S2	1-03 *							2				121
LEFT BUS DCLO		A03S2		1-04 *											121
LEFT BUS DCLO				1									17-0/8		121
LEFT BUS INIT		A01A1		1-01 *							2				122
LEFT BUS INIT		A02A1		1-02 *							1				122
LEFT BUS INIT		C03K2		1-03 *											122
LEFT BUS INIT				1									11-6/8		122
LEFT BUS INTR		A01B1		1-01 *							2				123
LEFT BUS INTR		A02B1		1-02 *							1				123
LEFT BUS INTR		C03P1		1-03 *											123
LEFT BUS INTR				1									12-0/8		123
LEFT BUS MSYN		B01V1		1-01 *							2				124
LEFT BUS MSYN		B02V1		1-02 *							1				124
LEFT BUS MSYN		D03L2		1-03 *											124
LEFT BUS MSYN				1									9-6/8		124
LEFT BUS NPG		A01U1	A02U1	1-01 *							2				125
LEFT BUS NPG		A02U1		1-02 *							1		5-5		125
LEFT BUS NPG		E02C1		1-03 *											125
LEFT BUS NPG				1									14-5/8		125
LEFT BUS PA		A01M1		1-01 *							2				126
LEFT BUS PA		A02M1		1-02 *							1				126
LEFT BUS PA		D03D1		1-03 *											126
LEFT BUS PA				1									12-4/8		126

RUN NAME	A/P	PIN NAME	ORDER PIN	BAY - ORDER	Q	DRAW RV PG Y	X	Z	REMARKS	LENGTH	EXCEPTIONS	RUN NUMBER
LEFT BUS PB		A01N2		1-01 *				2				127
LEFT BUS PB		A02N2		1-02 *				1				127
LEFT BUS PB		D03D2		1-03 *								127
LEFT BUS PB				1						12-2/8		127
LEFT BUS SACK		A01R2		1-01 *				2				128
LEFT BUS SACK		A02R2		1-02 *				1				128
LEFT BUS SACK		C03R2		1-03 *								128
LEFT BUS SACK				1						10-4/8		128
LEFT BUS SSYN		B01U1		1-01 *				2				129
LEFT BUS SSYN		B02U1		1-02 *				1				129
LEFT BUS SSYN		D03J2		1-03 *								129
LEFT BUS SSYN				1						9-4/8		129
LEFT NPG BUF		C03D1		1-01 *				1				130
LEFT NPG BUF		F02D2		1-02 *								130
LEFT NPG BUF				1						7-6/8		130
LEFT NPR		A02S2	A01S2	1-01 *				2				131
LEFT NPR		A01S2		1-02 *				1		7-0		131
LEFT NPR		F02C1		1-03 *								131
LEFT NPR				1						17-3/8		131
RB D00		A04C1	C04C1	1-01 *	2			2		3-7		132
RB D00		C04C1		1-02 *				1		5-2		132
RB D00		F04C1		1-03 *								132
RB D00				1						19-4/8		132
RB D01		A04D2		1-01 *				2				133
RB D01		C04D2		1-02 *				1				133
RB D01		F04E2		1-03 *								133
RB D01				1						18-0/8		133
RB D02		A04D1	C04D1	1-01 *	2			2		3-6		134
RB D02		C04D1		1-02 *				1		5-2		134
RB D02		F04H2		1-03 *								134
RB D02				1						19-2/8		134
RB D03		A04E2	C04E2	1-01 *				2				135
RB D03		C04E2		1-02 *				1		5-2		135
RB D03		F04K2		1-03 *								135
RB D03				1						18-5/8		135

RUN NAME	A/P	PIN NAME	ORDER PIN	BAY - ORDER	Q	DRAW RV PG Y	X	Z	REMARKS	LENGTH	EXCEPTIONS	RUN NUMBER
RB D04		A04E1	C04E1	1-01 *	2			2		3-6		136
RB D04		C04E1		1-02 *				1		5-4		136
RB D04		F04M2		1-03 *								136
RB D04				1						19-6/8		136
RB D05		A04F2		1-01 *				2				137
RB D05		C04F2		1-02 *				1				137
RB D05		F04P2		1-03 *								137
RB D05				1						18-6/8		137
RB D06		A04F1	C04F1	1-01 *	2			2		3-6		138
RB D06		C04F1		1-02 *				1		5-5		138
RB D06		F04S2		1-03 *								138
RB D06				1						20-0/8		138
RB D07		A04H2	C04H2	1-01 *				2				139
RB D07		C04H2		1-02 *				1		5-5		139
RB D07		F04U2		1-03 *								139
RB D07				1						19-3/8		139
RB D08		A04H1		1-01 *				2		3-7		140
RB D08		C04H1		1-02 *				1				140
RB D08		F03C1		1-03 *								140
RB D08				1						18-3/8		140
RB D09		A04J2		1-01 *				2				141
RB D09		C04J2		1-02 *				1				141
RB D09		F03E2		1-03 *								141
RB D09				1						17-6/8		141
RB D10		A04J1		1-01 *	2			2		3-6		142
RB D10		C04J1		1-02 *				1				142
RB D10		F03H2		1-03 *								142
RB D10				1						18-5/8		142
RB D11		A04K2		1-01 *				2				143
RB D11		C04K2		1-02 *				1				143
RB D11		F03K2		1-03 *								143
RB D11				1						18-0/8		143
RB D12		A04K1		1-01 *	2			2		3-7		144
RB D12		C04K1		1-02 *				1				144
RB D12		F03M2		1-03 *								144
RB D12				1						19-1/8		144

RUN NAME	A/P	PIN NAME	ORDER PIN	BAY - ORDER	Q	DRAW RV	PG	Y	X	Z	REMARKS	LENGTH	EXCEPTIONS	RUN NUMBER
RB D13		A04L2		1-01 *						2				145
RB D13		C04L2		1-02 *						1				145
RB D13		F03P2		1-03 *										145

RUN NAME	A/P	PIN NAME	ORDER PIN	BAY - ORDER	Q	DRAW RV	PG	Y	X	Z	REMARKS	LENGTH	EXCEPTIONS	RUN NUMBER
RIGHT BUS C00		B04U2		1-01 *						1				186
RIGHT BUS C00		D04U2		1-02 *						2				186
RIGHT BUS C00		D03S2		1-03 *										186
RIGHT BUS C00				1								10-4/5		186
RIGHT BUS C01		B04I2		1-01 *	1					1		3-3		187
RIGHT BUS C01		D03N2		1-02 *						2				187
RIGHT BUS C01		D04T2		1-03 *										187
RIGHT BUS C01				1								10-3/6		187
RIGHT BUS DCLO		B04F2	C03T2	1-01 *						1				188
RIGHT BUS DCLO		C03T2		1-02 *						2		7-0		188
RIGHT BUS DCLO		D04F2		1-03 *										188
RIGHT BUS DCLO				1								20-7/8		188
RIGHT BUS INIT		A04A1		1-01 *						1		3-7		189
RIGHT BUS INIT		C04A1		1-02 *						2				189
RIGHT BUS INIT		C03L1		1-03 *										189
RIGHT BUS INIT				1								12-1/8		189
RIGHT BUS INTR		A04B1		1-01 *						1		3-6		190
RIGHT BUS INTR		C04B1		1-02 *						2				190
RIGHT BUS INTR		C03N1		1-03 *										190
RIGHT BUS INTR				1								11-7/8		190
RIGHT BUS MSYN		B04V1		1-01 *						1				191
RIGHT BUS MSYN		D03K1		1-02 *						2				191
RIGHT BUS MSYN		D04V1		1-03 *										191
RIGHT BUS MSYN				1								10-4/8		191
RIGHT BUS NPG		A04U1		1-01 *						1				192
RIGHT BUS NPG		C03B1		1-02 *						2				192
RIGHT BUS NPG		C04U1		1-03 *										192
RIGHT BUS NPG				1								10-4/8		192
RIGHT BUS PA		A04K1		1-01 *						1		3-7		193
RIGHT BUS PA		C04K1		1-02 *						2				193
RIGHT BUS PA		D03E1		1-03 *										193
RIGHT BUS PA				1								12-7/8		193
RIGHT BUS PB		A04K2		1-01 *						1				194
RIGHT BUS PB		C04K2		1-02 *						2				194
RIGHT BUS PB		D03E2		1-03 *										194
RIGHT BUS PB				1								12-8/8		194

RUN NAME	A/P	PIN NAME	ORDER PIN	BAY - ORDER	Q	DRAW RV	PG	Y	X	Z	REMARKS	LENGTH	EXCEPTIONS	RUN NUMBER
RIGHT BUS SACK		A04R2		1-01 *						1				195
RIGHT BUS SACK		C04R2		1-02 *						2				195
RIGHT BUS SACK		C03N2		1-03 *										195
RIGHT BUS SACK				1								10-4/8		195
RIGHT BUS SSYN		B04U1		1-01 *						1				196
RIGHT BUS SSYN		D03H2		1-02 *						2				196
RIGHT BUS SSYN		D04U1		1-03 *										196
RIGHT BUS SSYN				1								10-2/8		196
RIGHT NPR		A04S2		1-01 *						2				197
RIGHT NPR		C04S2		1-02 *						1				197
RIGHT NPR		F02A1		1-03 *										197
RIGHT NPR				1								14-0/8		197

RUN NAME	A/P	PIN NAME	ORDER PIN	BAY - ORDER	Q	DRAW RV PG Y	X	Z	REMARKS	LENGTH	EXCEPTIONS	RUN NUMBER
RIGHT A15		B04R1		1-01 *				2		3-6		163
RIGHT A15		D04R1		1-02 *				1				163
RIGHT A15		F01E1		1-03 *								163
RIGHT A15				1						15-3/8		163
RIGHT A16		B04S2		1-01 *				2				164
RIGHT A16		D04S2		1-02 *				1				164
RIGHT A16		F01L1		1-03 *								164
RIGHT A16				1						15-2/8		164
RIGHT A17		B04S1		1-01 *				2		3-6		165
RIGHT A17		D04S1		1-02 *				1				165
RIGHT A17		F01K1		1-03 *								165
RIGHT A17				1						15-5/8		165
RIGHT BG4		B04E2	D04E2	1-01 *	H			2	TWP		HAND WIRE	166
RIGHT BG4		D04E2	F02F2	1-02 *	H			1	TWP		HAND WIRE	166
RIGHT BG4		F02F2		1-03 *							TO HERE	166
RIGHT BG4				1						15-4/8		166
RIGHT BG4 BUF		C03F1		1-01 *				1				167
RIGHT BG4 BUF		F02V2		1-02 *								167
RIGHT BG4 BUF				1						12-0/8		167
RIGHT BG5		B04B1	D04B1	1-01 *	H			2	TWP		HAND WIRE	168
RIGHT BG5		D04B1	F02T2	1-02 *	H			1	TWP		HAND WIRE	168
RIGHT BG5		F02T2		1-03 *							TO HERE	168
RIGHT BG5				1						17-2/8		168
RIGHT BG5 BUF		C03C1		1-01 *	1			1		6-3		169
RIGHT BG5 BUF		F02S1		1-02 *								169
RIGHT BG5 BUF				1						13-3/8		169
RIGHT BG6		B04A1	D04A1	1-01 *	H			2	TWP		HAND WIRE	170
RIGHT BG6		D04A1	F02N2	1-02 *	H			1	TWP		HAND WIRE	170
RIGHT BG6		F02N2		1-03 *							TO HERE	170
RIGHT BG6				1						16-6/8		170
RIGHT BG6 BUF		C03H1		1-01 *				1				171
RIGHT BG6 BUF		F02L2		1-02 *								171
RIGHT BG6 BUF				1						10-6/8		171
RIGHT BG7		A04V1	C04V1	1-01 *	H			2	TWP		HAND WIRE	172
RIGHT BG7		C04V1	F02K1	1-02 *	H			1	TWP		HAND WIRE	172
RIGHT BG7		F02K1		1-03 *							TO HERE	172
RIGHT BG7				1						17-2/8		172

RUN NAME	A/P	PIN NAME	ORDER PIN	BAY - ORDER	Q	DRAW RV PG Y	X	Z	REMARKS	LENGTH	EXCEPTIONS	RUN NUMBER
RIGHT BG7 BUF		C03D2		1-01 *				1		6-0		173
RIGHT BG7 BUF		F02J1		1-02 *								173
RIGHT BG7 BUF				1						12-5/8		173
RIGHT BR4		B04D2		1-01 *				1				174
RIGHT BR4		D04D2		1-02 *				2				174
RIGHT BR4		F02L1		1-03 *								174
RIGHT BR4				1						13-6/8		174
RIGHT BR5		B04C1		1-01 *	1			1		3-7		175
RIGHT BR5		D04C1	E02J1	1-02 *				2				175
RIGHT BR5		F02J1		1-03 *								175
RIGHT BR5				1						14-1/8		175
RIGHT BR6		A04U2		1-01 *				2				176
RIGHT BR6		C04U2		1-02 *				1				176
RIGHT BR6		F02R1		1-03 *								176
RIGHT BR6				1						14-2/8		176
RIGHT BR7		C04T2		1-01 *				2				177
RIGHT BR7		F02D1	A04T2	1-02 *				1				177
RIGHT BR7		A04T2		1-03 *								177
RIGHT BR7				1						16-6/8		177
RIGHT BUF ACLO		C03L2									1-PIN RUN	178
RIGHT BUF BBSY		C03V1									1-PIN RUN	179
RIGHT BUF DCLO		C03S2									1-PIN RUN	180
RIGHT BUF MSYN		D03J1									1-PIN RUN	181
RIGHT BUF SACK		C03P2									1-PIN RUN	182
RIGHT BUF SSYN		D03K2									1-PIN RUN	183
RIGHT BUS ACLO		B04F1	C03K1	1-01 *				1				184
RIGHT BUS ACLO		C03K1		1-02 *				2		4-4		184
RIGHT BUS ACLO		D04F1		1-03 *								184
RIGHT BUS ACLO				1						11-1/8		184
RIGHT BUS BBSY		A04P2		1-01 *				1				185
RIGHT BUS BBSY		C04P2	C01U2	1-02 *				2				185
RIGHT BUS BBSY		C01U2		1-03 *								185
RIGHT BUS BBSY				1						11-4/8		185

RUN NAME	A/P	PIN NAME	ORDER PIN	BAY - ORDER	G	DRAW	RV	PG	Y	X	Z	REMARKS	LENGTH	EXCEPTIONS	RUN NUMBER
RIGHT BUS C00		B04U2		1-01 *							1				186
RIGHT BUS C00		D04U2		1-02 *							2				186
RIGHT BUS C00		D03S2		1-03 *											186
RIGHT BUS C00				1									10-4/8		186
RIGHT BUS C01		B04I2		1-01 *	1						1		3-3		187
RIGHT BUS C01		D03N2		1-02 *							2				187
RIGHT BUS C01		D04T2		1-03 *											187
RIGHT BUS C01				1									10-3/8		187
RIGHT BUS DCLO		B04F2	C03T2	1-01 *							1				188
RIGHT BUS DCLO		C03T2		1-02 *							2		7-0		188
RIGHT BUS DCLO		D04F2		1-03 *											188
RIGHT BUS DCLO				1									20-7/8		188
RIGHT BUS INIT		A04A1		1-01 *							1		3-7		189
RIGHT BUS INIT		C04A1		1-02 *							2				189
RIGHT BUS INIT		C03L1		1-03 *											189
RIGHT BUS INIT				1									12-1/8		189
RIGHT BUS INTR		A04B1		1-01 *							1		3-6		190
RIGHT BUS INTR		C04B1		1-02 *							2				190
RIGHT BUS INTR		C03N1		1-03 *											190
RIGHT BUS INTR				1									11-7/8		190
RIGHT BUS MSYN		B04V1		1-01 *							1				191
RIGHT BUS MSYN		D03K1		1-02 *							2				191
RIGHT BUS MSYN		D04V1		1-03 *											191
RIGHT BUS MSYN				1									10-4/8		191
RIGHT BUS NPG		A04U1		1-01 *							1				192
RIGHT BUS NPG		C03B1		1-02 *							2				192
RIGHT BUS NPG		C04U1		1-03 *											192
RIGHT BUS NPG				1									10-4/8		192
RIGHT BUS PA		A04K1		1-01 *							1		3-7		193
RIGHT BUS PA		C04K1		1-02 *							2				193
RIGHT BUS PA		D03E1		1-03 *											193
RIGHT BUS PA				1									12-1/8		193
RIGHT BUS PB		A04N2		1-01 *							1				194
RIGHT BUS PB		C04N2		1-02 *							2				194
RIGHT BUS PB		D03E2		1-03 *											194
RIGHT BUS PB				1									12-0/8		194

RUN NAME	A/P	PIN NAME	ORDER PIN	BAY - ORDER	G	DRAW	RV	PG	Y	X	Z	REMARKS	LENGTH	EXCEPTIONS	RUN NUMBER
RIGHT BUS SACK		A04R2		1-01 *							1				195
RIGHT BUS SACK		C04R2		1-02 *							2				195
RIGHT BUS SACK		C03N2		1-03 *											195
RIGHT BUS SACK				1									10-4/8		195
RIGHT BUS SSYN		B04U1		1-01 *							1				196
RIGHT BUS SSYN		D03H2		1-02 *							2				196
RIGHT BUS SSYN		D04U1		1-03 *											196
RIGHT BUS SSYN				1									10-2/8		196
RIGHT NPR		A04S2		1-01 *							2				197
RIGHT NPR		C04S2		1-02 *							1				197
RIGHT NPR		F02A1		1-03 *											197
RIGHT NPR				1									14-0/8		197

ERROR LISTING

WIRE WRAP RUN NAME — HN0288.V22(22) 11/06/73 — 19-DEC-73 9:49 — PAGE 1

A/P	PIN NAME	ORDER PIN	HAY - ORDER	Q	DRAW RV PG Y	X	Z	REMARKS	LENGTH	EXCEPTIONS	RUN NUMBER
B INIT	C03J1									1-PIN RUN	11
LEFT BUF BBSY	D03A1									1-PIN RUN	111
LEFT BUF C00	D03P2									1-PIN RUN	112
LEFT BUF C01	D03M2									1-PIN RUN	113
LEFT BUF DCLO	C03R1									1-PIN RUN	114
LEFT BUF MSYN	D03H1									1-PIN RUN	115
LEFT BUF SSYN	D03F2									1-PIN RUN	116
RIGHT BG4	B04E2	D04E2	1-01 *	H			2	IWP		HAND WIRE	166
RIGHT BG4	D04E2	F02F2	1-02 *	H			1	IWP		HAND WIRE	166
RIGHT BG4	F02F2		1-03 *							TO HERE	166
RIGHT BG5	B04B1	D04B1	1-01 *	H			2	IWP		HAND WIRE	168
RIGHT BG5	D04B1	F02T2	1-02 *	H			1	IWP		HAND WIRE	168
RIGHT BG5	F02T2		1-03 *							TO HERE	168
RIGHT BG6	B04A1	D04A1	1-01 *	H			2	IWP		HAND WIRE	170
RIGHT BG6	D04A1	F02N2	1-02 *	H			1	IWP		HAND WIRE	170
RIGHT BG6	F02N2		1-03 *							TO HERE	170
RIGHT BG7	A04V1	C04V1	1-01 *	H			2	IWP		HAND WIRE	172
RIGHT BG7	C04V1	F02K1	1-02 *	H			1	IWP		HAND WIRE	172
RIGHT BG7	F02K1		1-03 *							TO HERE	172
RIGHT BUF ACLO	C03L2									1-PIN RUN	178
RIGHT BUF BBSY	C03V1									1-PIN RUN	179
RIGHT BUF DCLO	C03S2									1-PIN RUN	180
RIGHT BUF MSYN	D03J1									1-PIN RUN	181
RIGHT BUF SACK	C03P2									1-PIN RUN	182
RIGHT BUF SSYN	D03K2									1-PIN RUN	183

This drawing and specifications, herein, are the property of Digital Equipment Corporation and shall not be reproduced or copied or used in whole or in part as the basis for the manufacture or sale of items without written permission.

DIGITAL EQUIPMENT CORPORATION
MAYNARD, MASSACHUSETTS

ENGINEERING SPECIFICATION

DATE 1/3/71

TITLE DB11-A Bus Repeater

REVISIONS

REV	DESCRIPTION	CHG NO	ORIG	DATE	APPD BY	DATE
A	REVISED PER ECO 00002	00002			VBertram	7/9/71
B	ECO CHANGE	00005	BASTIANI	6-14-72	VBertram	6/9/72
C	CHANGE PER ECO	DB11A-00008	REILLY	10-73	DReilly	10/31/73

The bus repeater will allow the extension of the Unibus beyond 18 unit loads. The bus repeater will not degrade the bus cycle time of any device before the bus repeater, and will add a maximum 375ns to cycle time of devices addressed beyond the bus repeater. The repeater will allow 18 more loads to be hung on the Unibus.

1.1 The bus repeater DB11 will be contained in a single system unit with an input and output unibus connection.
The modules required are:

a. 4 - M785 Transceiver
b. 1 - M783 Drivers
c. 1 - M784 Receivers
d. 3 - M7212 Address Buffer Cards
e. 1- M7213 Buffer Master Card
f. 2 - M930 Resistor Termination Cards
6. 1 - M7248 UNIBUS REPEATER BUS BUSY

A layout of the modules is shown below:

A	B	C	D	E	F	
M920	M930		M785	M785		Output Side
		M7213	M785	M785		
M930			M784	M783		
M920		M7212	M7212	M7212		Input Side

NOTE:1 The Unibus is Bidirectional, but the bus repeater is not symetrical i.e. the processor must be on the input side of the bus repeater. This is because certain one-direction unibus signals are implemented in only one direction. All signals which must be bidirectional are so implemented.

ENG	APPD	SIZE	CODE	NUMBER	REV
		A	SP	DB11-A-7	C

DEC FORM NO. DRA 107

SHEET 1 OF 4

[redacted] CONTINUATION SHEET

TITLE DB11-A Bus Repeater

Power Used:

+5 Volts @ 2.2 Amps

1.2 Unit will operate from +40°F to 120°F with relative humidity of 95%.

1.3 Unit will add zero time to bus cycles before the repeater, and 375ns worst case to bus cycles of units addressed beyond the bus repeater. All guaranteed timing on the primary unibus in terms of delay for deskewing etc., are preserved on the buffered section of the bus.

These guaranteed timings are:

a. A lines good at device 75ns before MSYN;
b. A lines do not change at device before MSYN drops;
c. SSYN will arrive at device no more than 75ns before data is good;
d. INTR will arrive at processor no more than 75ns before data is good.

The repeater represents one unit load to the primary bus.

1.4 Operation of the Repeater

The Repeater uses the BBSY circuit as a master controlling signa The BBSY buffering circuit is a truly bidirectional circuit. From BBSY is determined the direction to enable the A-line circuits. Since the master is always asserting the A lines then by looking at BBSY the enabling signal for the A lines can be determined.

Next the direction of the D lines must be determined. This is determined from BBSY, C1, INTR signals. For DATI the D lines are enabled to the master, and for INTR the D lines are enabled to the Processor. The SSYN circuit direction is determined from the same three circuit, BBSY, C1 and INTR, but is determined differently than the D line circuits.

All one direction circuits require no gating to determine direction. These include INIT, INTR, all Grant; all B requests, SACK and ACLO.

The signal DCLO uses the identical circuit as BBSY since it must also be truly bidirectional because the power fail signal could be coming from either side of the buffer. The operations of the DCLO circuit is delayed an turn on so that a multi box system will turn on.

	SIZE	CODE	NUMBER	REV
	A	SP	DB11-A-7	C

DEC FORM NO DRA 109A

SHEET 2 OF 4

[redacted] CONTINUATION SHEET

TITLE DB11-A Bus Repeater

Types of Circuits

BBSY, DCLO

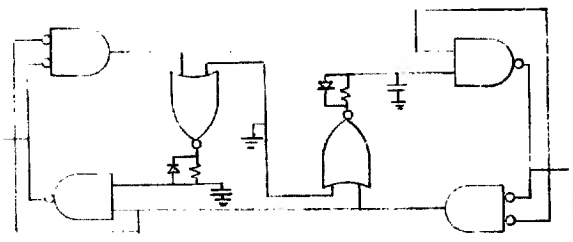

The BBSY circuit provides the A line gating depending on what side the master is on.

A line and C line Circuits

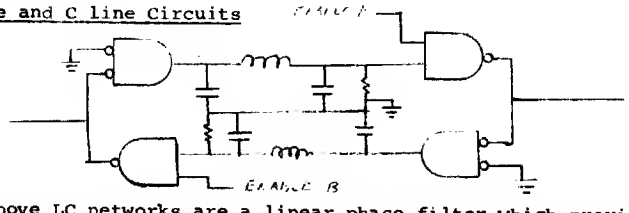

The above LC networks are a linear phase filter which provides an equal 75ns delay to assertion and negation of the A lines. These delays are required to preserve the Unibus guaranteed timing (deskewing etc).

D line Circuits

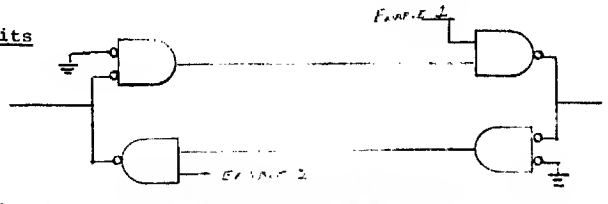

The D line circuits are mad e up of M785 transceiver modules.

Unidirectional Lines

All unidirectional lines are made up of M7B3 and M784 modules connected together.

Programming

None, the unit is transparent to any programs.

	SIZE	CODE	NUMBER	REV
	A	SP	DB11-A-7	C

DEC FORM NO DRA 109A

SHEET 3 OF 4

[redacted] CONTINUATION SHEET

TITLE DB11-A Bus Repeater

Testing

Unit should be tested by placing it in series with the Unibus as shown in the fig

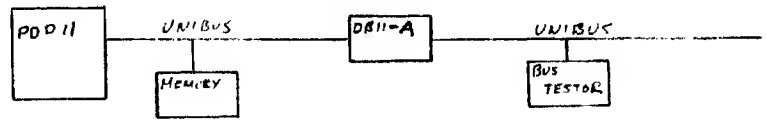

The above configuration should run ETP-2 for one hour with no errors.

	SIZE	CODE	NUMBER	REV
	A	SP	DB11-A-7	C

DEC FORM NO DRA 109A

SHEET 4 OF 4

DIGITAL EQUIPMENT CORPORATION
MAYNARD, MASSACHUSETTS

ACCESSORY LIST

MADE BY / DATE	CHECKED / DATE	SECTION
ENG DATE	PROD DATE 11/9/71	ISSUED SECT.

LEGEND

D DOCUMENT
DN DOCUMENT CHANGE NOTICE
PA PAPER TAPE ASCII
PB PAPER TAPE BINARY
PM PAPER TAPE READ-IN-MODE

ITEM NO.	DWG NO. / PART NO.	DESCRIPTION	QUANTITY / VARIATION: DB11-A	KIT CHECK BY ____ DATE ____	INSTALLATION CHECK BY ____ DATE ____
1	DB11-A	Print Set	1		
2	BB11-A	Maintenance Manual	1		
-	None	Software	-		
3	M920	M920 Connector	1		

TITLE	ASSY. NO.	SIZE	CODE	NUMBER	REV.	ECO NO.
DB11-A	SHEET / OF /	A	AL	DB11-A-10	—	DB11A-00003

DIST.

DEC FORM NO.
DRA 121

WIRE TABLE									
ITEM NO.	DESCRIPTION		FROM			TO			
	AWG	COLOR	POINT	CONNECTION	TERM	POINT	CONNECTION	TERM	SIGNAL
5	14 TWP	RED	3	P3-10	SOLD	15	P1-1	3	+5V
		BLK	4	P3-8	SOLD	14	P1-7	3	GND
9	14	GRY	5	P3-4	SOLD	16	P1-2	3	+15V
6	14 TWP	BLK	1	P3-12	SOLD	13	P1-9	3	GND
		BLU	2	P3-11	SOLD	12	P1-13		-15V
8	18	BRN	8	P3-1	SOLD	11	P2-2	3	LTc
7	18 TWP	VIO	6	P3-3	SOLD	9	P2-3	3	DcLo
		YEL	7	P3-2	SOLD	10	P2-4	3	AcLo
11	22	-	-	P3-13	SOLD	-	P3-14	SOLD	DcLo
11	22	-	-	P3-15	SOLD	-	P3-16	SOLD	AcLo

NOTES:

1. USE TIE WRAPS (X) ITEM #4 APPROXIMATELY EVERY THREE (3) INCHES WHEN NECESSARY AND AT EVERY BREAKOUT POINT.
2. DOT (●) INDICATES NAIL LOCATIONS FOR ASSEMBLY USE ONLY, COVER NAILS WITH SHRINK TUBING TO PREVENT CUTTING HARNESS.
3. USE CONN BRKT C-MD-9305761-H15-0 MOUNT WITH WOOD SCREWS. USE MATING CONN 1209350-15
4. USE CONN BRKT C-MD-9305761-H6-0 MOUNT WITH WOOD SCREWS. USE MATING CONN 1209350-06
5. USE CONN. HOLD DOWN B-MD-9305767-0-0 WITH PLATE B-MD-9305767-0-1, USE TAPE DEC #9008734 & CONN H807 DEC# (1209123) REMOVE PINS & FLANGES AS SHOWN IN DETAIL "A". MOUNT WITH WOOD SCREWS.

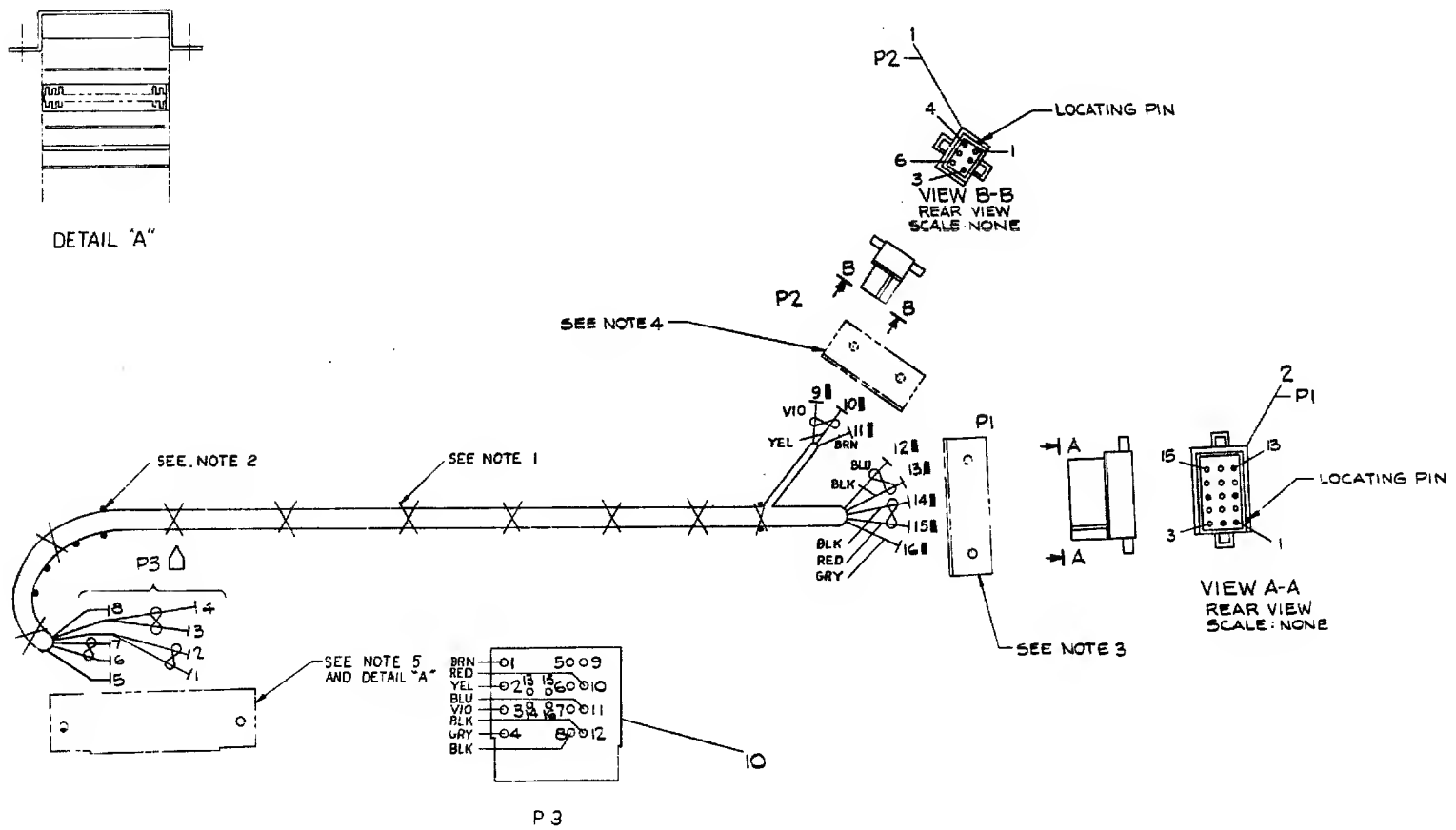

	QTY.	DESCRIPTION	PART NO.	ITEM NO.
	A/R	BUSS WIRE #22 AWG	9107560-01	11
	1	POWER CONN	G772	0
	A/R	WIRE #14 AWG GRY	9107370-88	9
	A/R	WIRE #18 AWG BRN	9107360-11	8
	A/R	WIRE #18 TWP YEL/VIO	9107430-47	7
	A/R	WIRE #14 TWP BLK/BLU	9107440-06	6
	A/R	WIRE #14 TWP BLK/RED	9107440-02	5
X	A/R	WRAP, TIE	9007031	4
	8	PIN, MALE	1209378-00	3
	1	HOUSING, CONN. 15 PIN	1209351-15	2
SYM	1	HOUSING, CONN. 6 PIN	1209351-06	1

PARTS LIST

EQUIPMENT CORPORATION

TITLE: G772 SYSTEM UNIT HARNESS

MATERIAL: SEE PARTS LIST

SIZE E | CODE IA | NUMBER 7009562-0-0 | REV

SCALE 1/1 | SHEET 1 OF 1

THIS SCHEMATIC IS FURNISHED ONLY FOR TEST AND MAINTENANCE PURPOSES. THE CIRCUITS ARE PROPRIETARY IN NATURE AND SHOULD BE TREATED ACCORDINGLY.
COPYRIGHT 1971 BY DIGITAL EQUIPMENT CORPORATION

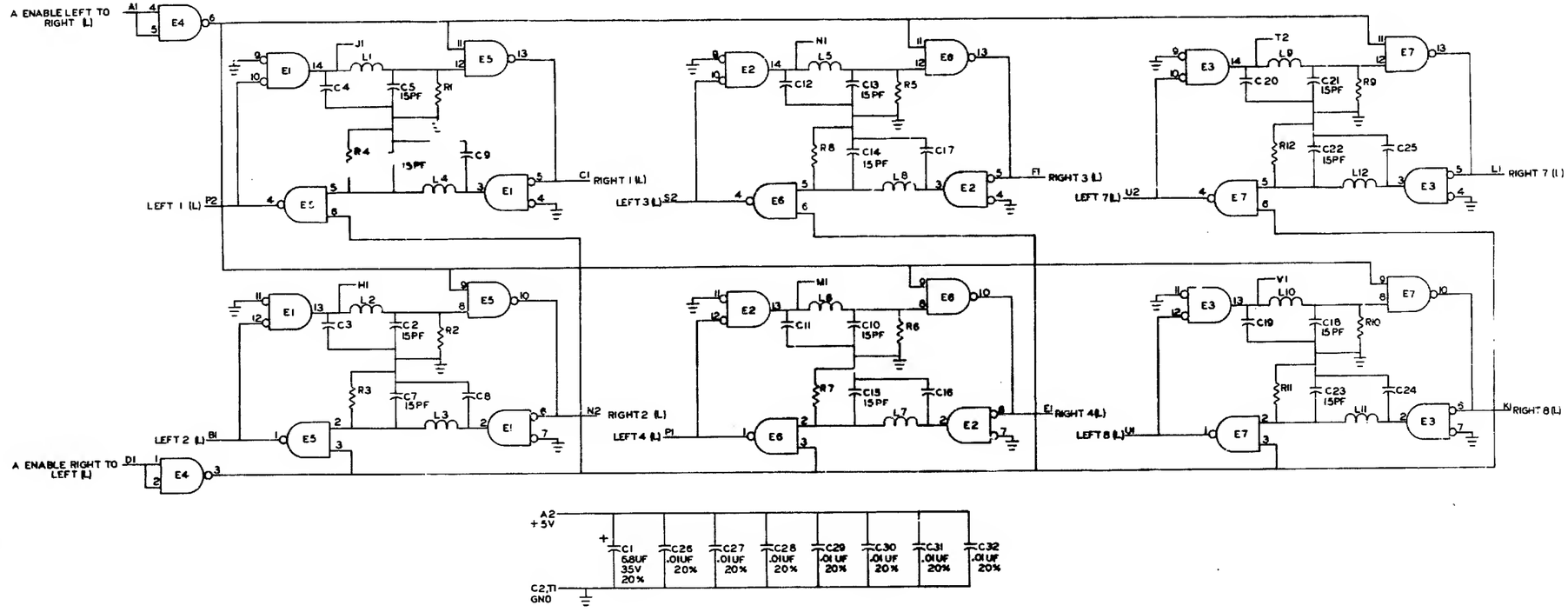

UNLESS OTHERWISE SPECIFIED
CAPACITORS ARE 100 PF, 100V, 5%
RESISTORS ARE 1K, 1/4 W, 5%
INDUCTORS ARE 47UH
PIN 7 = GND
PIN 14 = +5V ON EACH IC EXCEPT DEC8640
PIN 1 = GND ON DEC 8640
PIN 8 = +5V ON DEC 8640
E1, E2, E3 = DEC8640
E4 = DEC 74H00
E5 E6 E7 = DEC8881

TRANSISTOR & DIODE CONVERSION CHART

EQUIPMENT CORPORATION

TITLE: BUS REPEATER A LINES

SIZE D | CODE CS | M7212-01 | REV C

SHEET 4

This drawing and specifications, herein, are the property of Digital Equipment Corporation and shall not be reproduced or copied or used in whole or in part as the basis for the manufacture or sale of items without written permission.

PARTS REFERENCE

ITEM NO	DRAWING REFERENCE	DESCRIPTION	PART NUMBER	QUANTITY
1	C37, C39, C41, C43, C48	CAP. 15PF 100V 5%	1000007	5
2	C38, C40, C42, C44, C47	CAP. 100PF 100V 5%	1000016	5
3	C30	CAP. 560PF 100V 5%	1000025	1
4	C33, C34	CAP. 1000PF 100V 5%	1000042	2
5	C27, C28	CAP. 6.8UF 35V 20%	1000067	2
6	C1-C4, C6-C25	CAP. .01 UF 100V 20%	1001610	24
7	C46	CAP. .1UF 100V 10%	1002342	1
8	C35, C36	CAP. 1200PF 100V 5%	1002424	2
9	C45	CAP. .15UF 100V 10%	1002629	1
10	D1, D2	DIODE D600	1105366	2
11	R7, R8	RES. 150 1/4W 10%	1300252	2
12	R11-R14, R20	RES. 1K 1/4W 5%	1300365	5
13	R2-R4, R9, R10	RES. 300 1/4W 5%	1301425	5
14	R15-R19	RES. 390 1/4W 5%	1300309	5
15	L1-L5	INDUCTOR 47 UH 10%	1610271	5
16	E6	IC DEC7400	1905575	1
17	E10	IC DEC74H00	1909056	1
18	E8, E16, E17, E20, E21, E24	IC DEC 8640	1911469	6
19	E3, E12, E13, E18, E23, E25	IC DEC 8881	1909705	6
20	E14	IC DEC 74H04	1909931	1
21	E7, E11, E15, E19	IC DEC 8815	1909713	4
22	E1, E5	IC DEC 7404	1909686	2
23	E2, E4, E9	IC DEC 7402	1909004	3
24	E22	IC DEC 7474	1905547	1

COMPONENT PLACEMENT

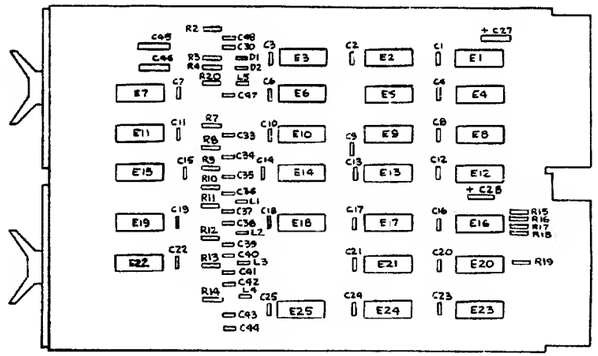

NOTES:

1. DETAILS ON COMPONENTS ARE NOTED IN THE PARTS REFERENCE, PLACEMENT IS NOTED IN THE COMPONENT PLACEMENT DIAGRAM. CAPACITORS WITHOUT NOTED VALUES ARE .01 MFD.
2. GND AND +5V ARE USUALLY PIN 7 AND PIN 14, RESPECTIVELY. EXCEPTIONS ARE:

IC TYPE	GND	+5V
DEC8640	PIN 1	PIN 8

REVISIONS

CHK	CHANGE NO.	REV
	M7213-00006	H
	1-7-72	
	V. BASTIANI	
	M7213-00007	J
	3-31-72	
	V. BASTIANI	
	M7213-00008	K
	7-27-72	
	V. BASTIANI	
	M7213-00010	L
	1-6-73	
	E. CLARK	
	1-22-75	

QTY.	DESCRIPTION	PART NO.	ITEM NO.
	PARTS LIST		

UNLESS OTHERWISE SPECIFIED
UNLESS OTHERWISE SPECIFIED
DIMENSION IN INCHES
TOLERANCES
DECIMALS ± .005 FRACTIONS ± 1/64 ANGLES ± 0°30'
FINAL SURFACE QUALITY
REMOVE BURRS AND BREAK SHARP CORNERS

MATERIAL

FINISH

DRN.	B. J. Haile	DATE 1-7-72
CHK'D.	K. Wolcott	DATE 1-29-72
ENG.		DATE 2-1-72
PROJ. ENG.		DATE 2-1-72
PROD.		DATE 2-1-72

FIRST USED ON

SCALE

SHEET 1 OF 2

digital EQUIPMENT CORPORATION
MAYNARD MASSACHUSETTS

TITLE
BUS REPEATER CARD

SIZE	CODE	NUMBER	REV.
D	CS	M7213-0-1	L

DIST.

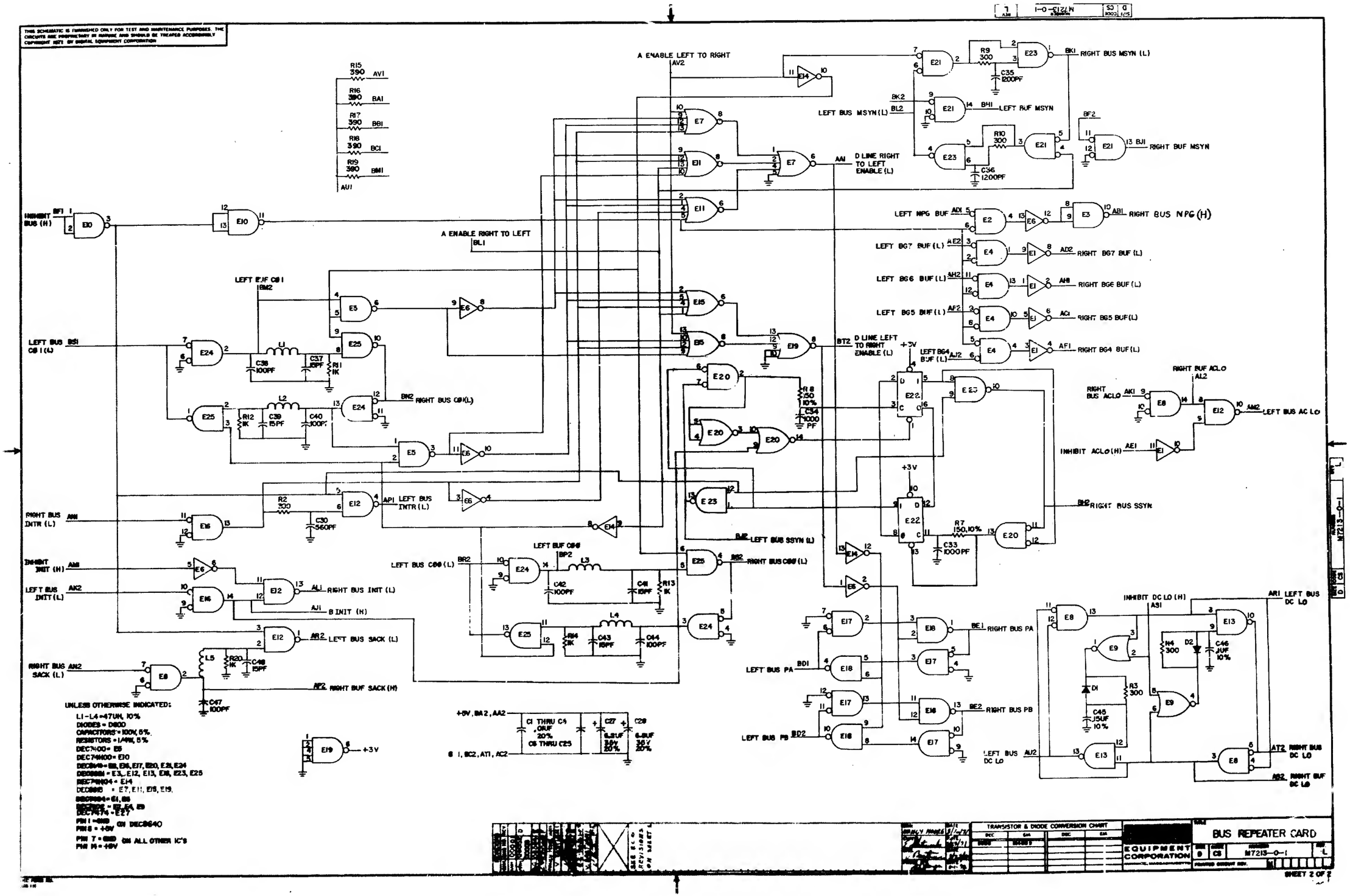

THIS SCHEMATIC IS FURNISHED ONLY FOR TEST AND MAINTENANCE PURPOSES. THE CIRCUITS ARE PROPRIETARY IN NATURE AND SHOULD BE TREATED ACCORDINGLY COPYRIGHT 1971 BY DIGITAL EQUIPMENT CORPORATION
A ENABLE LEFT TO RIGHT
A ENABLE RIGHT TO LEFT
D LINE RIGHT TO LEFT ENABLE (L)
D LINE LEFT TO RIGHT ENABLE (L)
RIGHT BUS MSYN (L)
LEFT BUS MSYN (L)
LEFT BUF MSYN
RIGHT BUF MSYN
LEFT NPG BUF
RIGHT BUS NPG (H)
LEFT BG7 BUF (L)
RIGHT BG7 BUF (L)
LEFT BG6 BUF (L)
RIGHT BG6 BUF (L)
LEFT BG5 BUF (L)
RIGHT BG5 BUF (L)
LEFT BG4 BUF (L)
RIGHT BG4 BUF (L)
RIGHT BUF ACLO
RIGHT BUS ACLO
LEFT BUS ACLO
INHIBIT ACLO (H)
RIGHT BUS SSYN
LEFT BUS SSYN (L)
RIGHT BUS CØØ (L)
LEFT BUS CØØ (L)
LEFT BUF CØØ
LEFT BUS INTR (L)
RIGHT BUS INTR (L)
INHIBIT INIT (H)
LEFT BUS INIT (L)
RIGHT BUS INIT (L)
B INIT (H)
LEFT BUS SACK (L)
RIGHT BUS SACK (L)
RIGHT BUF SACK (H)
INHIBIT DC LO (H)
LEFT BUS DC LO
RIGHT BUS DC LO
RIGHT BUF DC LO
LEFT BUS PA
RIGHT BUS PA
LEFT BUS PB
RIGHT BUS PB
UNLESS OTHERWISE INDICATED:
L1-L4=47UH, 10%
DIODES = D600
CAPACITORS = 100V, 5%
RESISTORS = 1/4W, 5%
DEC7400 = E5
DEC74H00 = E10
DEC8640 = E8, E16, E17, E20, E21, E24
DEC8881 = E3, E12, E13, E18, E23, E25
DEC74H04 = E14
DEC8815 = E7, E11, E15, E19
DEC7474 = E27
PIN 1 = GND ON DEC8640
PIN 8 = +5V
PIN 7 = GND ON ALL OTHER IC'S
PIN 14 = +5V
TRANSISTOR & DIODE CONVERSION CHART
EQUIPMENT CORPORATION
BUS REPEATER CARD
M7213-0-1
SHEET 2 OF 2

THIS SCHEMATIC IS FURNISHED ONLY FOR TEST AND MAINTENANCE PURPOSES. THE CIRCUITS ARE PROPRIETARY IN NATURE AND SHOULD BE TREATED ACCORDINGLY.
COPYRIGHT 1969 BY DIGITAL EQUIPMENT CORPORATION

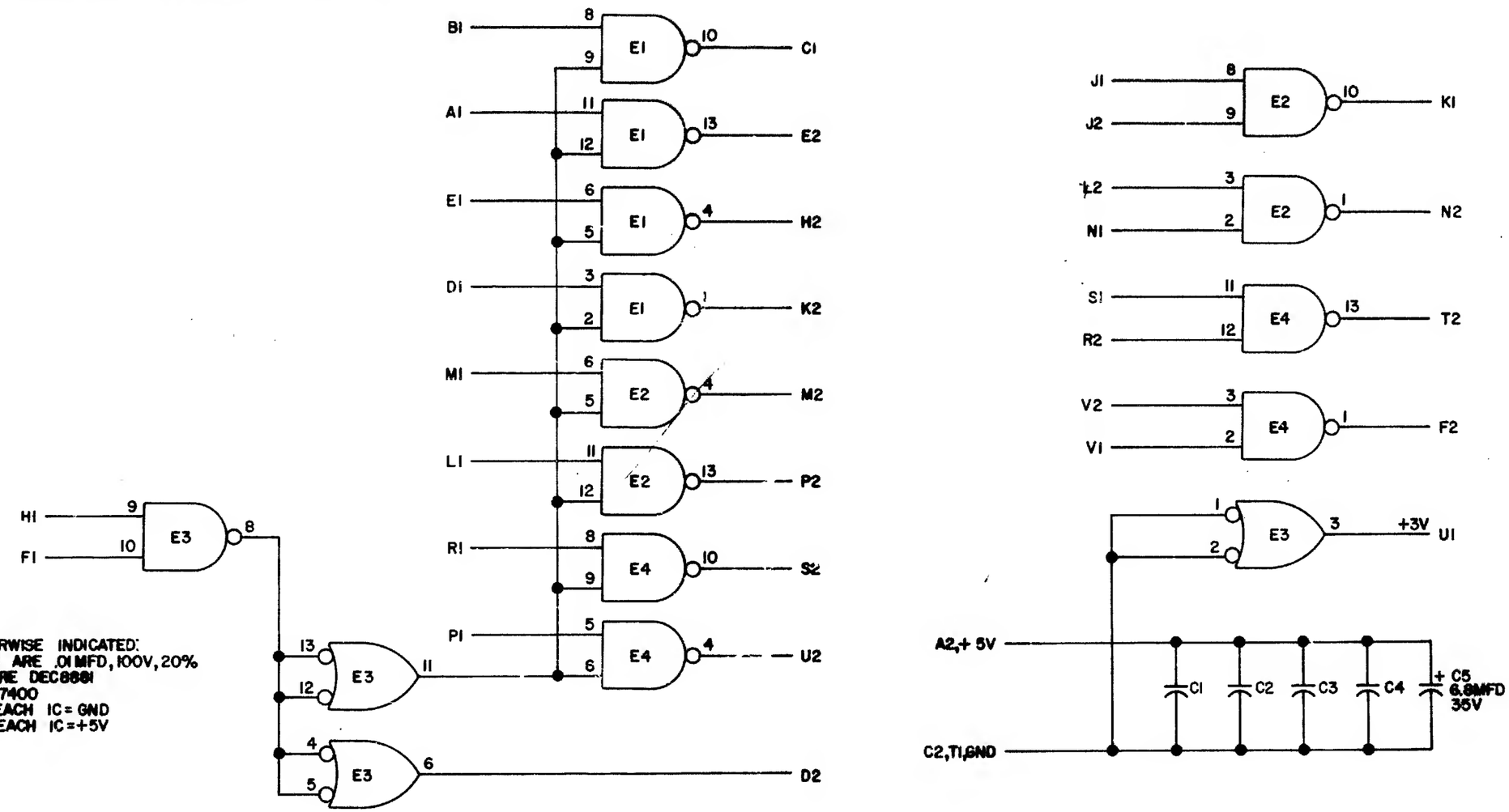

UNLESS OTHERWISE INDICATED:
CAPACITORS ARE .01 MFD, 100V, 20%
E1,E2,E4 ARE DEC8881
E3 IS DEC7400
PIN 7 ON EACH IC = GND
PIN 14 ON EACH IC = +5V

REVISIONS			
REV		DRN. A. Patey	DATE 11-21-69
CHG NO.		CHK'D T. Shebrowski	DATE 1-7-70
CHK		ENG P.E. Jenson	DATE 2/25/70
		PROD	DATE

TRANSISTOR & DIODE CONVERSION CHART

DEC	EIA	DEC	EIA

EQUIPMENT CORPORATION
MAYNARD, MASSACHUSETTS

TITLE: UNIBUS DRIVERS M783

SIZE	CODE	NUMBER	REV.
B	CS	M783-0-1	

PRINTED CIRCUIT REV A B

DEC FORM NO
DRB 102

5

DIST. 324, 434, 4353

PINK

THIS SCHEMATIC IS FURNISHED ONLY FOR TEST AND MAINTENANCE PURPOSES. THE CIRCUITS ARE PROPRIETARY IN NATURE AND SHOULD BE TREATED ACCORDINGLY. COPYRIGHT 1969 BY DIGITAL EQUIPMENT CORPORATION

NOTE:
DEC 8640'S WERE PHASED IN AS 380 REPLACEMENTS. ANY 380 FAILURES SHOULD BE REPLACED BY 8640'S.

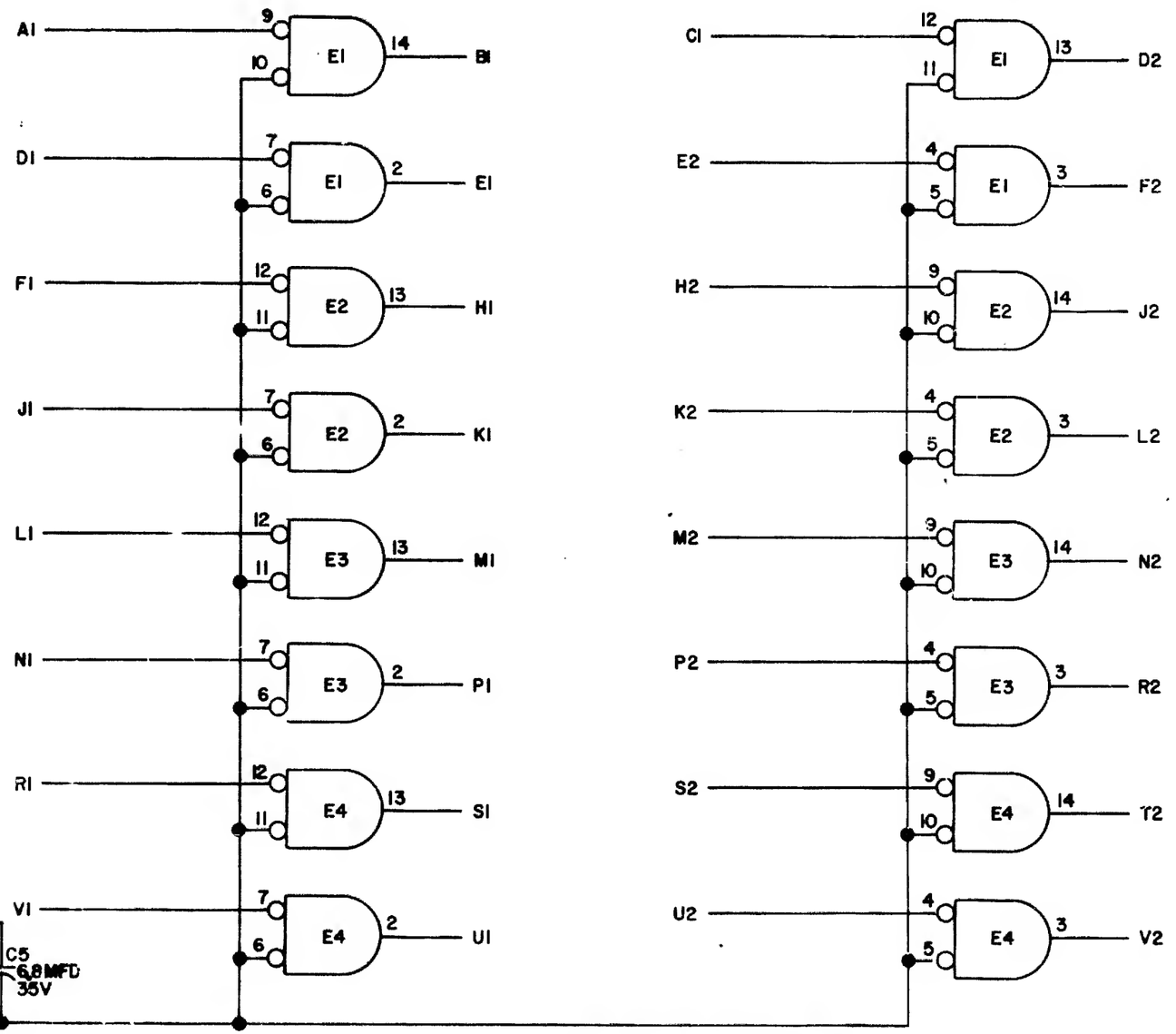

UNLESS OTHERWISE INDICATED:
CAPACITORS ARE .01MFD, 100V, 20%
IC'S ARE DEC 8640
PIN 1 ON EACH IC=GND
PIN 8 ON EACH IC=+5V

REVISIONS		
CHK	CHG NO	REV
	00001	A
	00002	B
	00003	C

L. CONDON

DRN		DATE 11-18-69
CHK'D		DATE 1-7-70
ENG		DATE 3/11/70
PROD		DATE

TRANSISTOR & DIODE CONVERSION CHART

DEC	EIA	DEC	EIA

digital EQUIPMENT CORPORATION
MAYNARD MASSACHUSETTS

TITLE UNIBUS RECEIVERS M784

SIZE	CODE	NUMBER	REV
B	CS	M784-0-1	C

PRINTED CIRCUIT REV A B C

DEC FORM NO DRB 102

MS641-P4

5

24 434 42 3

Perk

THIS SCHEMATIC IS FURNISHED ONLY FOR TEST AND MAINTENANCE PURPOSES. THE CIRCUITS ARE PROPRIETARY IN NATURE AND SHOULD BE TREATED ACCORDINGLY. COPYRIGHT 1969 BY DIGITAL EQUIPMENT CORPORATION

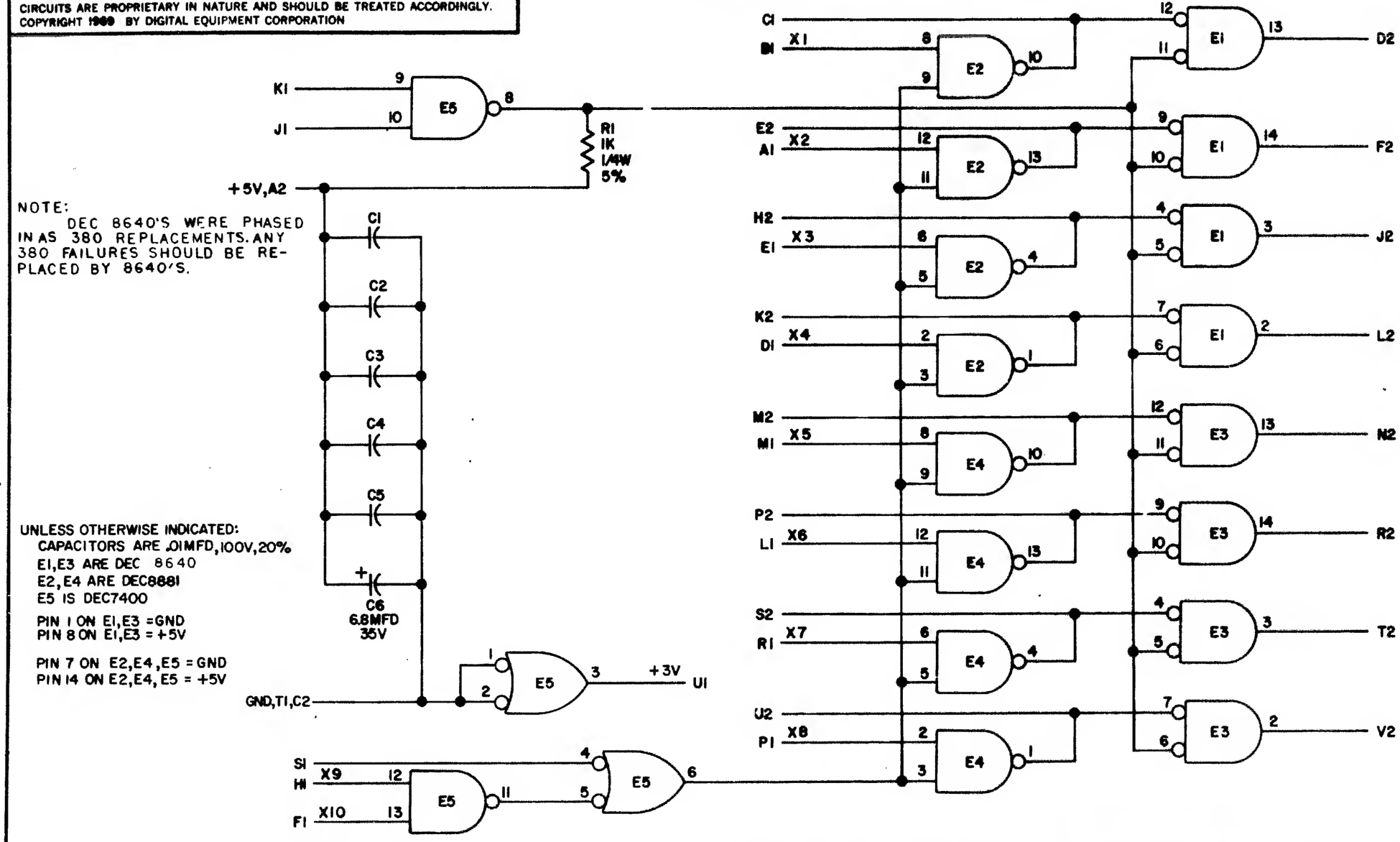

NOTE:
DEC 8640'S WERE PHASED IN AS 380 REPLACEMENTS. ANY 380 FAILURES SHOULD BE REPLACED BY 8640'S.

UNLESS OTHERWISE INDICATED:
CAPACITORS ARE .01MFD, 100V, 20%
E1, E3 ARE DEC 8640
E2, E4 ARE DEC8881
E5 IS DEC7400

PIN 1 ON E1, E3 = GND
PIN 8 ON E1, E3 = +5V

PIN 7 ON E2, E4, E5 = GND
PIN 14 ON E2, E4, E5 = +5V

REVISIONS	REV.	CHG NO.	CHK
	A	00001	
	B	00003	

DRN.		DATE 11-19-69
CHK'D		DATE 1-7-70
ENG		DATE 3/11/70
PROD		DATE

TRANSISTOR & DIODE CONVERSION CHART

DEC	EIA	DEC	EIA

digital EQUIPMENT CORPORATION MAYNARD, MASSACHUSETTS

TITLE UNIBUS TRANCEIVERS M785

SIZE	CODE	NUMBER	REV.
B	CS	M785-0-1	B

PRINTED CIRCUIT REV. A B

DEC FORM NO DRB 102

5 PINK DIST 324,434,4353

THIS DRAWING AND SPECIFICATIONS, HEREIN ARE THE PROPERTY OF DIGITAL EQUIPMENT CORPORATION AND SHALL NOT BE REPRODUCED OR COPIED OR USED IN WHOLE OR IN PART AS THE BASIS FOR THE MANUFACTURE OR SALE OF ITEMS WITHOUT WRITTEN PERMISSION.
COPYRIGHT © 1975 DIGITAL EQUIPMENT CORPORATION

NOTES:

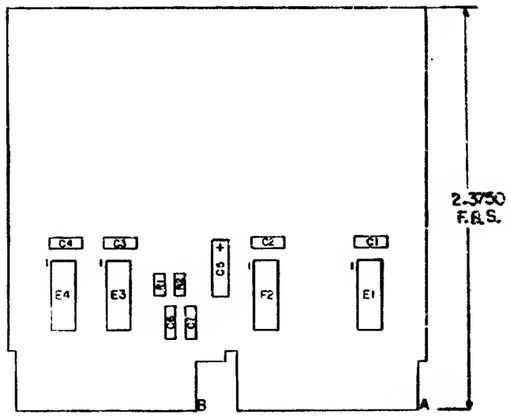

REF		X-Y COORDINATE HOLE LOCATION	K-CO-M930-0-4	1
REF		ASSY/DRILLING HOLE LAYOUT	D-AH-M930-0-5	2
REF		MODULE ECO HISTORY	B-MH-M930-0-G	3
1		ETCHED CIRCUIT BOARD	5Ø08696	4
4	C1 THRU C4	CAP .22 µF 5ØV CER	1Ø1Ø274-Ø1	5
2	C6,C7	CAP 1ØØØ pF 25ØV 2Ø% DISC	1ØØØØ43	6
1	C5	CAP 39 µF 1ØV 1Ø% TANT	1ØØØØ76	7
2	R1,R2	RES 383Ω 1/4W 1%	1305125	8
2	E1,E4	28 RES DIVIDER NETWORK	1312628-ØØ	9
2	E2,E3	25 RES DIVIDER NETWORK	1312628-Ø1	1Ø

IC TYPE	GND	+5V
GND AND 5V ARE USUALLY PIN 7 AND 14 RESPECTIVELY UNLESS NOTED, ARE SHOWN ABOVE		

IC PIN LOCATIONS

QTY	REF. DESIGNATION	DESCRIPTION	PART NO.	REV

PARTS LIST

M930

ECO# BOARD REV. B-P2

DEC NO.	EIA NO.	DEC NO.	EIA NO.

SEMICONDUCTOR CONVERSION CHART

DRN J. CARTIER 75-MAR-18
CHK
ENGR
NEXT HIGH ASSY
SCALE —
SHEET OF

TITLE BUS TERMINATOR

SIZE D CODE CS NO. M930-0-1 REV E

THIS DRAWING AND SPECIFICATIONS, HEREIN, ARE THE PROPERTY OF DIGITAL EQUIPMENT CORPORATION AND SHALL NOT BE REPRODUCED OR COPIED OR USED IN WHOLE OR IN PART AS THE BASIS FOR THE MANUFACTURE OR SALE OF ITEMS WITHOUT WRITTEN PERMISSION.
COPYRIGHT © 1975 DIGITAL EQUIPMENT CORPORATION

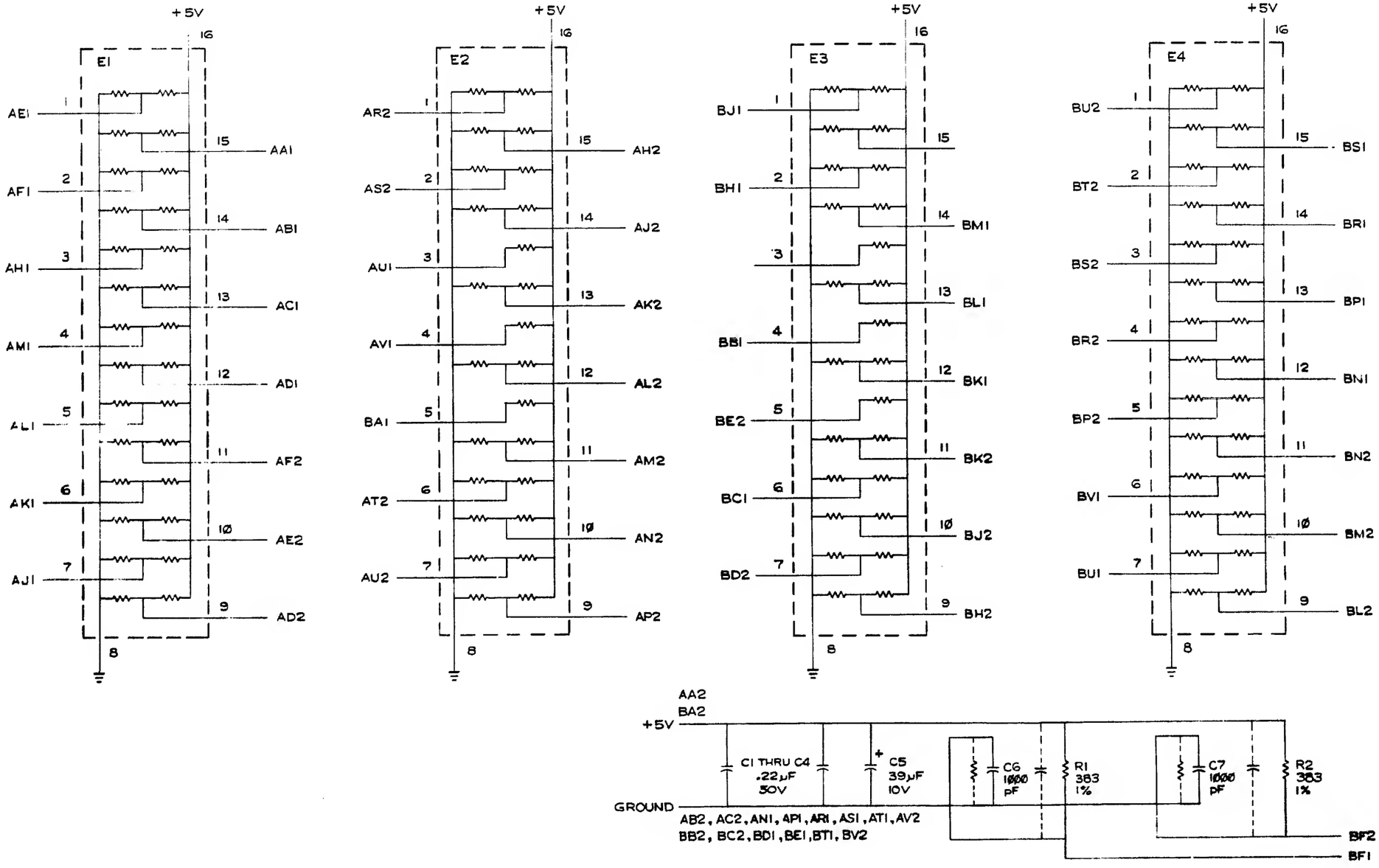

REVISIONS		
CHK	CHANGE NO.	REV.

TITLE	SIZE	CODE	NUMBER	REV.
BUS TERMINATOR	D	CS	M930-0-1	E
SCALE —	SHEET 2 OF 2	DIST.		

This drawing and specifications, herein, are the property of Digital Equipment Corporation and shall not be reproduced or copied or used in whole or in part as the basis for the manufacture or sale of items without written permission.

PARTS REFERENCE

ITEM NO	DRAWING REFERENCE	DESCRIPTION	PART NUMBER	QUANTITY
1	E5	IC DEC 7404	1909686	1
2	E2,E6	IC DEC 314	1909704	2
3	E1	IC DEC 8881	1909705	1
4	E4	IC DEC 7405	1909930	1
5	E3,E7	IC DEC 74123	1910436	2
6	C10	CAP 6.8 UF 35V 20% S. TANT	1000067	1
7	C1-C7	CAP .01 UF 100V 20% DISC	1001610	7
8	C8,C9	CAP 27PF 100V 5% MICA	1001739	2
9	R2,R3	RES 5.6 K 1/4W 5%	1301874	2
10	R1,R4	RES 5.11K 1/8W 1% MF	1304854	2
11		SPLIT LUGS	9006735	8

COMPONENT PLACEMENT

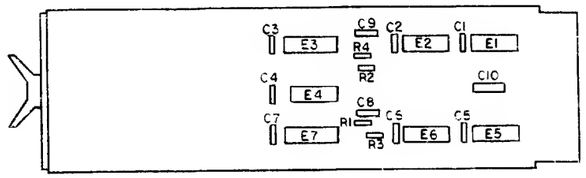

NOTES:

1. DETAILS ON COMPONENTS ARE NOTED IN THE PARTS REFERENCE, PLACEMENT IS NOTED IN THE COMPONENT PLACEMENT DIAGRAM. CAPACITORS WITHOUT NOTED VALUES ARE .01 MFD.
2. GND AND +5V ARE USUALLY PIN 7 AND PIN 14, RESPECTIVELY. EXCEPTIONS ARE:

IC TYPE	GND	+5V
DEC 74123	PIN 8	PIN 16
DEC 314	PIN 1	PIN 8

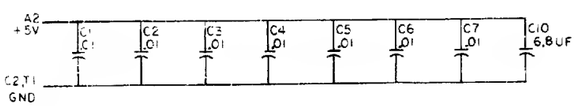

QTY.	DESCRIPTION	PART NO.	FROM NO.
	PARTS LIST		

UNLESS OTHERWISE SPECIFIED
DIMENSION IN INCHES
TOLERANCES
DECIMALS ± .005 FRACTIONS ± 1/64 ANGLES ± 0°30'
FINAL SURFACE QUALITY ✓
REMOVE BURRS AND BREAK SHARP CORNERS

MATERIAL: SEE PARTS LIST

FINISH: —

NEXT HIGHER ASSY

SCALE 1/1

SHEET 1 OF 2

[redacted] EQUIPMENT CORPORATION
MAYNARD MASSACHUSETTS

TITLE: UNIBUS REPEATER BBSY

D CS M7248-Ø-1 B

REVISIONS: REV | CHANGE NO | CHK

DEC FORM NO DRO 1024

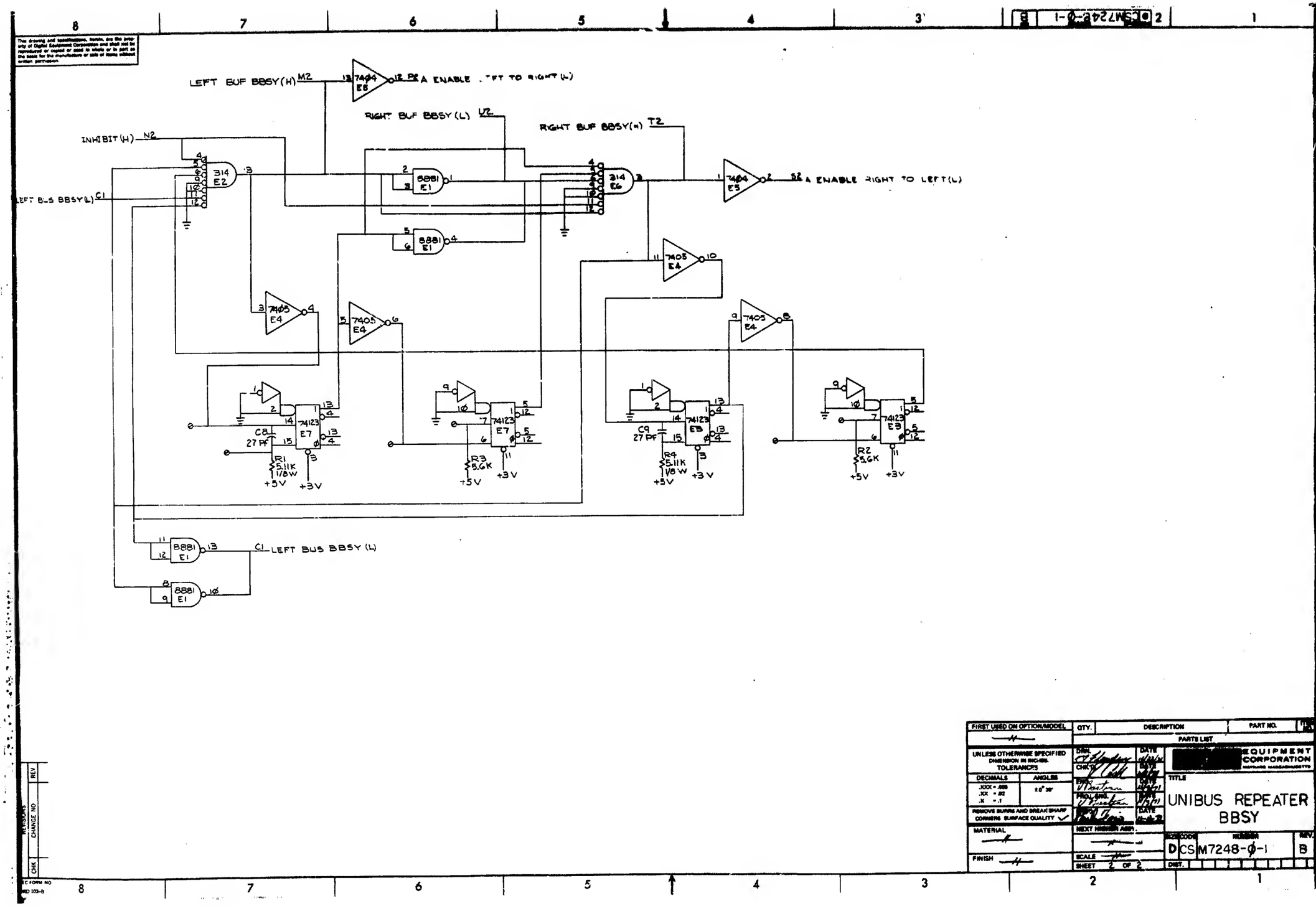

FIRST USED ON OPTION/MODEL	QTY.	DESCRIPTION	PART NO.
		PARTS LIST	

UNLESS OTHERWISE SPECIFIED DIMENSION IN INCHES. TOLERANCES

DECIMALS	ANGLES
.XXX = .005	±0° 30'
.XX = .02	
.X = .1	

REMOVE BURRS AND BREAK SHARP CORNERS SURFACE QUALITY ✓

MATERIAL

FINISH

DRN. DATE
CHK'D DATE
ENG. DATE
PROJ. ENG. DATE
DATE

NEXT HIGHER ASSY.

SCALE

SHEET 2 OF 2

[redacted] EQUIPMENT CORPORATION
MAYNARD MASSACHUSETTS

TITLE

UNIBUS REPEATER BBSY

SIZE	CODE	NUMBER	REV.
D	CS	M7248-Ø-1	B

DIST.

REVISIONS: CHK | CHANGE NO | REV

EC FORM NO